This is a digital copy of a book that was preserved for generations on library shelves before it was carefully scanned by Google as part of a project to make the world's books discoverable online.

It has survived long enough for the copyright to expire and the book to enter the public domain. A public domain book is one that was never subject to copyright or whose legal copyright term has expired. Whether a book is in the public domain may vary country to country. Public domain books are our gateways to the past, representing a wealth of history, culture and knowledge that's often difficult to discover.

Marks, notations and other marginalia present in the original volume will appear in this file - a reminder of this book's long journey from the publisher to a library and finally to you.

Usage guidelines

Google is proud to partner with libraries to digitize public domain materials and make them widely accessible. Public domain books belong to the public and we are merely their custodians. Nevertheless, this work is expensive, so in order to keep providing this resource, we have taken steps to prevent abuse by commercial parties, including placing technical restrictions on automated querying.

We also ask that you:

+ *Make non-commercial use of the files* We designed Google Book Search for use by individuals, and we request that you use these files for personal, non-commercial purposes.

+ *Refrain from automated querying* Do not send automated queries of any sort to Google's system: If you are conducting research on machine translation, optical character recognition or other areas where access to a large amount of text is helpful, please contact us. We encourage the use of public domain materials for these purposes and may be able to help.

+ *Maintain attribution* The Google "watermark" you see on each file is essential for informing people about this project and helping them find additional materials through Google Book Search. Please do not remove it.

+ *Keep it legal* Whatever your use, remember that you are responsible for ensuring that what you are doing is legal. Do not assume that just because we believe a book is in the public domain for users in the United States, that the work is also in the public domain for users in other countries. Whether a book is still in copyright varies from country to country, and we can't offer guidance on whether any specific use of any specific book is allowed. Please do not assume that a book's appearance in Google Book Search means it can be used in any manner anywhere in the world. Copyright infringement liability can be quite severe.

About Google Book Search

Google's mission is to organize the world's information and to make it universally accessible and useful. Google Book Search helps readers discover the world's books while helping authors and publishers reach new audiences. You can search through the full text of this book on the web at `http://books.google.com/`

UC-NRLF
$B 114 539

Digitized by Google

IN MEMORIAM
George Davidson
1825-1911

SIGILLVM · VNIVERSITATIS · CALIFORNIENSIS
FIAT LVX
MDCCCLXVIII
EX LIBRIS

Professor of Geography
University of California

Digitized by Google

Digitized by Google

Digitized by Google

[illegible] is some on small
[illegible]
[illegible] What is the general construction
of a [illegible] mill?

I dont want ye ter make
anything 'laborate. jes draw
[illegible] like it.

[illegible] sit!

Side elevation

plan

End view.

Digitized by Google

Digitized by Google

George Davidson
Emmaustown
Pa.

Digitized by Google

Digitized by Google

Digitized by Google

U.S. Bureau of Ordnance

INSTRUCTIONS

IN RELATION TO THE

PREPARATION OF VESSELS OF WAR

FOR BATTLE:

TO THE

DUTIES OF OFFICERS AND OTHERS

WHEN AT QUARTERS:

AND TO

ORDNANCE AND ORDNANCE STORES.

PUBLISHED BY ORDER OF THE NAVY DEPARTMENT.

WASHINGTON:
C. ALEXANDER, PRINTER,
1852.

Digitized by Google

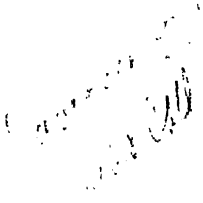

Digitized by Google

VF160
A3
1852

BUREAU OF ORDNANCE AND HYDROGRAPHY,
June 28th, 1852.

SIR:

Herewith, I have the honor to submit proposed "Instructions in relation to the preparation of vessels of war for Battle, the duties of officers and others when at Quarters; and to Ordnance and Ordnance Stores."

These Instructions have been prepared by authority from the Department, and under an order of the late Commodore Warrington when Chief of this Bureau, addressed to Commanders D. G. Farragut, T. A. Dornin, S. Barron, A. A. Harwood, and Lieut. A. B. Fairfax; with the exception of "the boat and field gun exercise," which was prepared by Lieut. John A. Dahlgren.

The order for preparing these Instructions was given for the purpose of securing substantial uniformity upon the subjects to which they relate, and which had heretofore varied according to the views of individuals. In the execution of this order, the Board have selected with great labor and judgment, from former orders and usages, those which were best calculated to secure the greatest efficiency.

The propositions of the Board have been examined and revised, and are approved by the present Chief of the Bureau. If sanctioned by the Department, and an observance of them enjoined upon the officers of the Navy, much advantage may be anticipated.

If future experience should enable officers to suggest useful modifications of any subject embraced in these Instructions, they will be carefully considered, and the expediency of their adoption be submitted to the decision of the Department.

With much respect,
I am, Sir, your obedient servant,
(Signed,) C. MORRIS,
Chief of Bureau.

To the HONORABLE
The Secretary of the Navy.

NAVY DEPARTMENT,
July 2d, 1852.

SIR:

The Instructions accompanying your communication of the 28th ultimo, in relation to the preparation of vessels of war for battle, the duty of officers and others when at quarters, and to Ordnance and Ordnance Stores, having been duly approved by the Department, are to be strictly observed and enforced by all officers of the Navy, until they shall be modified or revoked with the sanction or by the order of the Department.

I am very respectfully,
Your obedient servant,
(Signed,) WILL. A. GRAHAM.

Commodore CHARLES MORRIS,
Chief of the Bureau of Ordnance and Hydrography.

M584144

Digitized by Google

Digitized by Google

INDEX TO THE WORDS.

ALPHABETICALLY ARRANGED.

	ARTICLE.	PAGE.
A.		
Accoutrements for Captains of guns, Boarders and small-arm men	477—487	145—147
Air-ports, to be closed and secured in action	110	19
Allowances, Ordnance, not specified in tables, to be regulated by special orders from Chief of Bureau	—	xviii* (Note.)
Ammunition, allowance of, for target practice	6	2
——— not to be exceeded without authority	7	2
——— supplies of, not be reduced below 50 rounds	6	2
——— for all arms for three years	—	iii, iv
Anti-corrosion	509	158
Assembling at Quarters, calls	176—187	32, 33
B.		
Blocks, Gun tackle	460	139
Boarders, divisions of	86, 89, 92	14, 15
——— calls for	179	32
——— exercise of	230—233	59, 60
——— repelling	90 234, 235	15 60
Boats, armed and manned for service	258—263	75, 76
——— duties of Officers who command	262, 263, 272	76, 77
——— crews, preparatory duties of	264—271	" "
Boatswain, duties of, at Quarters	109	19
Boring-bit, caution in using	—	38 (Note.)
Breechings, mode of fitting and dimensions	458	139
——— number allowed to each gun	—	vii
——— shifting in action	202	45, 46
C.		
Captain, general duties of	1—23	1—4
——— station of, in action	64	11
——— duties of, at Quarters	96—99	16
——— duties of, in case of fire	244, 251—253	72—74
Calipers, sliding, for measuring samples of iron	300	85
Canister, or case shot, effective range of	239	70
Carpenter, general duties of	56—58	9
——— duties of, at General Quarters	133—139	23
Cartridge bags	488—494	148—150
——— number allowed to Vessels	—	vii
Cartridges for boat and field guns to be stowed in the Magazine	441	127
——— for small arms	441, 442	"
——— number allowed	—	iii

*The Roman numerals refer to the Table of Allowances of Ordnance Equipments and Stores, at the end of the Instructions.

Digitized by Google

	ARTICLE.	PAGE.
Cartridge boxes for small arms	483, 484	146, 147
Changing sides in battle	200	44
Charcoal, preparation of, for making gunpowder.	—	110
Charges, table of, for Great Guns	438	126
——— for boat and field howitzers	440	127
——— for ordinary firing, to be stowed nearest entrance of Magazine	37	6
——— distinguishing colors of	38	6
——— near firing to be used in salutes	51	8
——— substitute for, to be used in exercise	116	20
Composition, Plantou's, for preserving wood and iron	509	158
Cone pick	486	147
Coopering prohibited in Magazines	44	7
D.		
Dark lanterns	503	152
Density of gun iron, determination of	315—322	88, 89
Dispart, how determined	237	63, 64
Dispart sight, when to be preferred	"	65
Distance of objects at sea, how determined	"	64, 65
Distinctions and indulgences for those who excel in gunnery recommended	2	1
Distribution of Ship's company at Quarters	63—80	11, 14
Division boxes, their contents and place in action.	151	27
——— allowance of, for vessels	—	vi
——— tubs to be filled before action	110	19
Double shotting, notes on	239	69
——— Captain to give orders for, in action	99	16
E.		
Elevators, for supply of powder, described	496	151
——— to be kept in place and in working order.	110	19
Equipments and Implements, place for, at broadside guns	149	25—26
——— place for, at pivot guns	204	47
——— defects or deficiencies in, to be reported to Bureau of Ordnance and Hydrography	5	1
Equipments and Stores, allowances for 3 years.	—	iii—xvii
Executive Officer, general duties of	24—29	4, 5
——— to appoint men in each watch, to stow hammocks	—	33 (Note.)
——— duties of, at Quarters	100—102	17
——— duties of, in case of fire	244	72
Exercise of guns, daily, at commencement of cruise	2	1
——— of the men at every station at the guns and by signs	241	71
——— in the use of small arms	13	3
——— of boat's crews in the use of boat and field howitzers	14	3
——— general, at night	3	1
——— of broadside guns	188—203	34—46
——— of pivot guns	218—229	50—58
——— Manual, notes upon	236—241	61—71

Digitized by Google

	ARTICLE.	PAGE.
F.		
Fighting and securing both sides	199	43, 44
Fire, precaution against, in action	56	9
—— preparations for extinguishing, in action	134	23
—— suggestions in case of	242—257	72—74
—— alarm of, a call to Quarters	243	72
—— false alarm of, followed by exercise	255	74
—— from guns below Spar Deck, to be kept up while boarding	233	59, 60
Firing lower deck guns, caution in	192	36
—— quick, gun's crews to be exercised in	201 240	45 70
—— notes on the various kinds of	238	67—69
Fire-arms, not to be used in tops without an order from the Captain	95	15
—— precautions in using them when allowed	105	18
Fire-buckets	473	143, 144
Firemen, selection of	87	15
—— calls for, at Quarters	183	33
Fire Screens	499	152
Fire works, stowage of	42	7
—— allowance of, to vessels	—	ix
Flash pans	502	152
Fuzes, not to be shifted or shortened without an order from the Captain	20	3
—— preparation and distribution of	418	123
—— to be supplied in equal proportions of 5″, 10″, and 15″	423	"
—— preparation of screws, and precaution in handling	424—426	"
—— allowance of, to vessels for shells and shrapnel	—	iii
Fuze Wrench	476	144
G.		
Grape Shot, effective distance for using	239	70
—— allowance to vessels	—	iii
Grapnels for boats	504	153
Griolet, for dismounting guns described	507	154
Gunner, general duties of	35—54	6—8
—— duties of, at Quarters	114—115	20
—— duties in arming boats for service	261	75
Gunner's mate	53	8
Gunpowder, preservation and distribution of	429—445	125—128
—— manufacture and inspection of	—	110—114
Guns, Naval, inspection and proof of	331—366	99—105
—— preservation of, at Navy Yards	394—400	116, 117
—— to be examined before mounting on board ship	404	117
—— how prepared for transportation	407	118
—— at end of cruize to be examined	408	"
—— not to be cut or chisseled	402	117
—— not to be condemned without survey	403	"
—— care of, on board ship	18	3
—— not to be struck below	21	3, 4
—— divisions of, how numbered	66	11
—— getting in and out	275—277	79—80
—— dismounting	274	78
—— throwing overboard	278	80, 81

Digitized by Google

	ARTICLE.	PAGE.
Gun metal, inspection and proof of	279—284	82
——— samples of, directions for preparing and testing	302—329	85, 91
Gun Carriages, naval, nomenclature and description of	450—457	134—138
——— examination and preservation of	405	117, 118
Gun's crews, table of	74	13
——— to be taken equally from each watch	76	"
——— of pivot and shifting guns	78	"
——— selection of men for	82—85	14
——— stations and gun numbers of, for broadside guns	152—156	28
——— duties of, preparatory to action	157—173	29, 31
——— stations, gun numbers and preparatory duties of, for pivot guns	205—217	48, 49
Gun Gear and Implements	458	139
Gun Slings	508	155
Gurnet Pendant	275	79
H.		
Hammocks, arrangement for stowage of, at night	187	33 (Note.)
Handspikes	471	143
Hatchways, to be covered in action	146, 110	19, 25
Housing Guns	198	42
Hydrometer, description and use of	315—322	88, 89
I.		
Implements, spare, for divisions	150	27
——— and equipments, miscellaneous	496—508	151, 155
Inclined planes, for elevation and depression	237	66
L.		
Lackers, for iron Ordnance	509	157, 158
——— for small arms, and water-proof paper	"	56 (Note,) 159
——— allowance of, to vessels	—	x
Line of metal, objections to aiming by	237	63
Ladles for guns	470	142
Loading in one motion	201	45
Lock-string, men to be exercised in pulling	236	62
M.		
Magazines of ships to be inspected before taking powder on board	29	5
——— precaution in opening and closing	48	7
——— on shore, periodical inspection of	429	125
Magazine keys, to be kept by the Captain	23	4
——— by and to whom delivered on going to Quarters	112	19
——— dresses and shoes described	497	151
——— Implements, allowances of, to vessels	—	xi, xii
——— scuttles necessary for each class of guns	119	21
Master, general duties of	34	6
——— duties of, at Quarters	104—108	18
——— in case of fire	247	73
Master-at-arms, duties of, preparatory to, and in action	139, 140	24
Muzzle-lashing, grommet, for housing guns	474	144

Digitized by Google

	ARTICLE.	PAGE.
O.		
Officers, stations of, at Quarters	64—72	11, 12
—— commanding divisions, general duties of	30—33	5, 6
—— commanding divisions of guns, duties of, at Quarters	143—151	24, 27
—— duties in case of fire	248	73
Ordnance, naval, nomenclature, and description of	449	130, 132
—— inspection of	331	99
—— mean ranges of	—	133
Ordnance equipments and stores, table of	—	i—xvii
—— stores, preparation, preservation, and distribution of	385—428	115, 124
—— allowance of, not to be exceeded without authority	393	116
—— condition of, to be examined	54	8
P.		
Packing-boxes, when empty to be preserved and returned into store	444 506	127 153
Paints and Lackers	509	156, 159
Passing boxes, distinguishing labels on top of	115	20 (Note.)
—— are not to be passed below orlop, or berth deck in action	117	21
—— description of	472	143
—— number allowed for guns	—	vii
Pawl and ratchett, use of	221	51
Pendulums, for horizontal firing	237	65
Percussion Caps, to be kept in boxes, and stowed separately	41	7
—— to be supplied from Laboratory at Washington	443	127
—— not be put in the Magazine	448	129
—— number allowed to vessels	—	iii
Pikemen, selection of	90	15
Pistol frog	481	145
Pivot guns, exercise of	218	50
—— transporting	229	57
—— shifting screw, description and care of	475	144
Pointing guns, notes on	237	62, 66
Powder for saluting, may be purchased abroad	10	2
—— excess of, to be transferred by vessels leaving foreign stations	11	"
—— test of, when not regularly inspected	12	
—— reception and landing of	19	3
—— loose, not to be kept on board	40	7
—— preservation of, at sea	49	8
—— substitute for, in exercise	116	20
—— supply of, at Quarters	120—131	21—23
—— (See Gunpowder.)		
Powder casks, how marked	—	114
—— in Magazines on shore, care and stowage of	430	125
Powder Division, duties of officer in command of	110—116	19, 20
Powder measures	445	127, 128
Powder tanks, how stowed and marked	36, 39 431	6, 7 125
—— lids of, to be kept closed	49	8

Digitized by Google

	ARTICLE.	PAGE.
Primers, cannon, manufacture and stowage of..	446	128
——— allowance of, to vessels.....	—	iii
Primer boxes described.....	480	145
Priming, cautions to be observed in.....	236	61—62
Proof samples, for testing iron.....	303 306 311	86, 87
Projectiles, care and preservation of, on board ship	16, 17	3
——— number and kind of, allowed to vessels..	—	iv
Pumps to be kept clear and in order.....	56	9

Q.

Quarters, General, calls for assembling at.....	176—178	32
——— duties of officers at.....	96—149	16—25
Quarter Gunners, duties of, at Quarters.....	151, 174	27, 31
——— in case of fire.....	249	73
Quarter Bills, arranged with reference to Watches, recommended.....	81	14
——— forms of, for vessels of the 1st Class....	Appendix A.	162—173
Quick firing, note on.....	240	70
Quoins and beds for guns, arrangement of.....	237	65
——— fitting and adjustment of, at Navy Yards.	406	118
Quoin (Screw) for pivot guns.....	221	51
——— Ward's.....	237	65, 66

R.

Rammers, for guns, material and dimensions of.	462	140
——— and sponges, place of, at the guns.....	149	26
Rattles for calling boarders described.....	498	151
Ricochet.....	238	68

S.

Sail-trimmers, calls for, at Quarters.....	181	32
Saltpetre, preparation of.....	—	110
Saluting, precautions to be observed in.....	50—52	8
Securing guns.....	197	41
Shoulder Belt, for small-arm men, described.....	485	147
Shells, inspection of.....	376—381	107, 108
——— charges for, marking and stowage of....	419, 421	123
——— precautions in unloading.....	427	"
——— for boat guns, stowage of.....	428	124
Shells, filling on board ship.....	20	3
Shell houses, examination of.....	422	123
——— rooms, stowage of, and marking of boxes	45	7
——— whips.....	501	152
Shot, inspection of.....	369 - 375	106, 107
——— buckets described.....	500	152
——— holes, mode of indicating position of, preparation for stopping.....	57, 58 135	9 23
——— Carpenter's crew to look out for, in action	139	23, 24
Shot and Shells, dimensions and weight of.....	—	109
——— preservation, care, classification and marking of, at Navy Yards.....	409—413	119, 120

Digitized by Google

	ARTICLE.	PAGE.
Shot and Shells, piling of	414—417	120—122
——— supply of, in action	132	23
——— number of, to be kept in readiness on the decks	26	4
Signal Officer, duties of, at Quarters	103	17
Sights for guns	237	62—64
——— to be fitted and marked for their proper guns	406	118
——— trunnion for pivot guns	461	139
Single stick, Boarders to be exercised in use of	235	60
Small-arms, crew to be exercised in use of	13	3
——— in action, to be loaded and distributed by order of the Captain	99	16
——— to be unloaded after exercise or battle	197	42
——— equipments and implements for	—	iv—vi
Sponges for guns, description and use of	463—468	140—142
Sponge caps	465	142
Spur tubes described	447	128
——— when and how used in firing	236	61, 62
——— number allowed to vessels	—	iv
Store keeper, Naval, to account for Ordnance Stores	385	115
Surgeons, and Assistants, duties of, preparatory to action	141, 142	24
——— in case of fire	250	73
Swabs	110	19
Sword frog and loop, described	478	145
T.		
Tackle falls for guns, dimensions of	459	139
Tangent firing, when resorted to	237	64
——— table for	Appendix (B.)	174
Target for practice at sea, described	505	153
——— material for	—	xii
Target practice	4, 6, 8	1, 2
Testing instrument, Wade's, description and use of	285—301 307—310	83, 85 86, 87
Thumbstall	482	146
Tourniquets, to be distributed before action	142	24
Tensile strength of gun iron	323	90
Transverse....do....do	312	87
Training, lateral	237	66
——— sharp	—	35 (Note.)
Tripping line and toggle described	237	66
Trucks, shifting	203	46
Trunnion sights, use of	237	64
Trying the range	"	"
V.		
Vent, enlargement of in guns, ascertained	408	118, 119
Varnish for scabbards	509	159, 160
W.		
Wads, not to be used in saluting in port	51	8
——— selvagee, description and manufacture of	495	150
Watches, to be divided equally at the guns	186	33

Digitized by Google

	ARTICLE.	PAGE.
Water, fresh, a proper supply of, to be provided before action	110, 114	19, 20
Windage of shot and shells	382, 383	108
Worm, (Robinson's) description and use of	469	142
Wounded, means of conveyance of, to the Surgeon	28 110 145	5 19 25
Y.		
Yeoman, general duties of, and regulation in relation to discharge and re-enlistment of	59—62	9, 10

Digitized by Google

CORRECTIONS AND ALTERATIONS.

On page 6, third line of paragraph 39, for 'are' read "and are."
On page 20,—marginal note, tenth line from the bottom—for 'then boxes' read "their boxes."
On page 22,—fourth line of paragraph 126, and last line of paragraph 130—for 'starboad' and 'satsboard' read "starboard."
On page 22, add as a note to paragraphs 125 and 127—"In ships of the line of two decks the forward and after chase guns of the spar deck will be supplied, respectively, from the same scuttles as the forward and after divisions of main deck guns."
On page 33, last line of paragraph 186, for 'are manned' read "may be manned."
On pages 47, 48, and 51, paragraphs 204, 206, and 221, for 'paul' read "pawl."
On page 70—nine lines from the bottom—for 'cannister' read "canister."
On page 110—second line from top, for 'fowading' read "forwarding." Eighth line from the top—'for 1.300 of foreign salt' read "$\frac{1}{300}$th of foreign salt;" and on the 8th and 9th line from bottom, for 'seives' read "sieves."
On page 119, first line of paragraph 409, for 'shell' read "shells."
On page 126, in the table of service charges, at the head of the column instead of 'for two projectiles' read "for near firing or two projectiles." In the adjoining column, for 'dimensions' read "diameters," of cartridge formers. To the table add the following note—"Of the service charges one tenth shall be for distant firing, six tenths for ordinary firing and three tenths for near firing or for two projectiles."
On page 128, first line of paragraph 447, for 'are composed' read "are each composed."
On page 130, second line of paragraph 449, for 'parts of guns and cannon,' read "plates of guns."
On page 137, at the end of paragraph 456, read "15. Guide plates and rail."
On page 138, sixth line from top, for 'in side rails' read "inside of rails."
On page 145, erase No. 479.
On page 146, fourth line from bottom, for 'cartridges' read "fingers."
On page 149, paragraph 491, erase the words 'basted or' on the seventh line, and for 'basted down' read "felled down" on the ninth line.
On page 158, twelve lines from the bottom, for 'Planton's' read "Plantou's."
On page 165, middle column, eight lines from bottom, erase "and spar decks."

ALTERATIONS IN THE TABLE OF ALLOWANCES.

On page iii—eighth line from top—alter 'fixed ammunition' to "ammunition."
On page iii—in allowance of *Powder*, add after "priming"—"or musket."
On page iv—in allowance of *Shells* for cannon and shell guns—strike out the words "one half" and the words "In shot lockers."
On page iv—in allowance of spur tubes, alter from 50 to 30.
On page iv—in allowance of *Axes, battle*, add $\frac{1}{6}$ after 1. allowed.
On page vi—in allowance of *Pikes*, reduce the number one half: and of *Axes, wood*, reduce the allowance one half, above 1st class sloops, below that rate allow 2 to each vessel.
On page viii—in allowance of *Drum heads*, reduce the allowance one half.
On page ix—in allowance of *Rockets*, do. do. do.
On page xii—in allowance of *Matchrope*, do. do. do.
On page xiv—in allowance of "*Sabots, for shells, bouched only*," alter 44 to 10.
On page xv—in allowance of "*Sights, breech, and reinforce, each*," insert "or" before the words "one spare." "*Sponges, woolen-wove, adapted to the chamber, if any, complete*," insert 1. before $\frac{1}{6}$.
On page xvi—"*Straps, tin, for sabots*," strike out altogether.

Digitized by Google

Digitized by Google

GENERAL DUTIES.

CAPTAIN.

1. The CAPTAIN or COMMANDING OFFICER will be careful to require that all the ordnance instructions are strictly enforced on board the vessel under his command; and although particular duties are assigned, and various instructions given to the other officers of the vessel, yet he is to see that the duties are performed, and the instructions obeyed, by the officers to whom they are respectively addressed.

2. As soon as the crew is received on board the vessel he shall see that it is duly quartered, and daily exercised at general quarters, or by divisions, unless other pressing duties shall prevent, until each officer and man is thoroughly instructed in his duties; after which the exercises are to be frequently repeated during the cruise. Exercises which are short and spirited are considered preferable to those which are long and fatiguing. Judicious distinctions and indulgences to those who excel, may be found very useful and are recommended.

When the men have become well acquainted with their duties at the guns, or when the general duties of the ship are unusually fatiguing, the divisional exercises may be confined to those belonging to the watch on deck, the half crews of adjacent guns uniting to work one of them.

3. He will at least once in three months assemble the crew at quarters in the night, without any previous intimation of his intention to do so, and have a general exercise. He will inspect the ship throughout, and cause an entry to be made in the log book of the length of time required between the beginning of the call to quarters and the complete preparation for commencing action.

4. As soon after the ship has been commissioned as circumstances will permit, he will cause at least one round to be fired with shot or shells, according to the nature of the guns, and when practicable, at targets at known distances. This will probably show whether the equipments are perfect and their uses understood.

5. He will immediately endeavor to ascertain if defects or deficiences exist, and if any are found, will remedy them as far as in his

Digitized by Google

power consistently with instructions, representing them to the commandant of the yard of outfit, if near it; and, if important, to the Chief of the Bureau of Ordnance and Hydrography.

6. When practicable, he will in each quarter of the first year of the cruise, expend in target-practice six rounds, and in each succeeding quarter year, six broadsides.

He will not, however, either for this purpose, or for saluting, reduce his supplies of ammunition below fifty rounds.

7. These allowances are not to be exceeded without authority from the Bureau of Ordnance, unless from the special nature of the service on which vessels may be ordered, the commanding officer of a fleet or squadron may direct more frequent firing on board such particular vessels—in which case a copy of the order is to be appended to the periodical returns of expenditure transmitted to the Bureau.

8. The allowances for target-practice are not to be expended in one or two exercises, but are to be divided in such proportions as to allow target-practice once a fortnight, or at least once a month; and at least three-fourths of the charges allowed shall be expended in practice at sea when it can be conveniently done, opportunities being chosen for that purpose under all the circumstances of wind and weather in which vessels of war are liable to engage in battle.

9. When in port, and it is practicable, such places are to be selected for practice as will admit of the recovery of the projectiles; and at such times, when the effect of the bursting charge is not important, a blowing charge may be used in shells, to test the efficiency of the fuze without destroying them.

10. Powder for *saluting* may be purchased abroad to preserve a supply of our own proof powder for action.

11. When a vessel is about to leave a foreign station to return directly to the United States, and other vessels belonging to the Navy are to be left on the station without a full supply of powder, the vessel which is about to leave may be directed to transfer to those remaining on the station any excess of powder that may be on board beyond fifty rounds.

12. Should it become necessary to use powder for service charges which has not been regularly inspected and proved in the manner required by regulations, such tests of it must be made as circumstances will admit.

The ranges given by it may be compared with those of service

Digitized by Google

powder of known good quality, under the same circumstances. If deficient in strength, the quantity of the charges should be increased until the ranges are equalized, in order that the breech-sights may still indicate the proper elevations for each charge and distance.

13. The whole crew are to be exercised by divisions in the use of the musket, carbine, pistol and sword, and in firing at a target with small arms, by suitable persons, each division under the superintendence of its respective commanding officer.

14. He will cause the boat's crews to be exercised in all the preparations for attacking an enemy, either by land or water, and in the use of boat and field howitzers, and small arms, under all the various circumstances likely to arise in such service, and particularly in embarking and disembarking the boat and field guns.

15. He will transmit quarterly reports in detail, of all practice with projectiles, to the Bureau of Ordnance and Hydrography.

16. He will cause frequent and thorough examinations to be made into the condition of the armament, shot and shells; and will see that care is taken to keep the shot and shell lockers dry, and that the shot and shells stowed therein are cleaned and rubbed with fish oil, as often as requisite to prevent rust.

17. When renewing the lacker on shot kept on deck, great care must be taken not to increase the diameter above the high gauge.

18. The guns and their equipments should be kept as dry as possible, and no salt water used in cleaning them.

19. When receiving or landing powder, the red flag is to be always hoisted at the fore, and all proper precautions taken to guard against accidents from fires and lights. The tanks should be passed through the ports most convenient to the magazines, and landed on mats to prevent injury.

20. Shells are never to be filled nor their fuzes shifted or shortened without his order, and whenever, except in action, these operations are to be performed, he will see that a suitable and well secured place is selected for the purpose, and that all the precautions are taken which are prescribed, when the magazines are to be opened, and also that the further precautions and manner of performing the work are observed, which are contained in the directions for filling and emptying shells when on shore.

21. He is not to dismount, strike below, or otherwise render unfit for immediate use any of the guns on board the ship he commands,

Digitized by Google

except imperative necessity should require it for the safety of the vessel, without the express permission of the Secretary of the Navy, or of the Chief of the Bureau of Ordnance, or the written order of the Commander-in-Chief of the Squadron to which the vessel belongs. When such order shall be given by the commander of a squadron, it must state minutely the circumstances which required its issue. Should the commander of a vessel be obliged to give such an order of his own authority, for the safety of the vessel, the particular circumstances of such necessity are to be immediately entered at large in the log, and in all cases the earliest possible information is to be given to the Commander of the Squadron, and to the Secretary of the Navy.

22. When guns are struck below, or when shipped for transportation, precaution should be taken to guard them from injury; the bore should be coated with melted tallow or other protecting composition, and a wad dipped in the same be inserted in the bore and connected with the tompion by a laniard.

23. He will keep the keys of the magazine and shell rooms in the cabin, where they may be obtained by the executive officer in case they should be wanted when the Captain is absent from the vessel, and they are only to be delivered to the executive officer, the officer of the powder division, or the gunner.

EXECUTIVE OFFICER.

24. The SENIOR LIEUTENANT, or the COMMANDER when acting as executive officer, will, under the orders and direction of the Captain, ascertain that all the ordnance stores and equipments ordered or allowed for the vessel, are received on board in good order, that they are properly distributed and stowed, that they are only used or expended according to directions from proper authority, and that they are duly accounted for according to the directions and forms which may be prescribed by the Department.

25. He will be particularly attentive to the state of the batteries, small arms, magazines, shell rooms and shot lockers, and the passages leading to them, and take care that they are kept as clear and ready for action as practicable.

26. He will cause convenient places to be assigned for the stowage of spare articles which may be required in action, and see that shot for at least twenty broadsides for shot guns, and one shell for each shell

Digitized by Google

gun, are always in readiness upon the repective decks, unless directed to be temporarily removed for some special cause.

27. When salutes are to be fired, he is either personally to examine, or direct one of the officers of divisions to examine and ascertain that all preparations are made and precautions taken to avoid accidents, and is to give the order in firing.

28. In large vessels he will cause a cot with a spare sacking-bottom, or such other apparatus as may be approved by the Surgeon, to be prepared and kept for the purpose of lowering the wounded to the orlop or berth deck.

29. Before the powder is received on board, he, with the Gunner, will carefully inspect the magazines, their passages and light rooms, and have them thoroughly cleaned, dried and aired; and will see that the cisterns, pipes and stop cocks, are in order; the lighting apparatus cleaned and tried, and particularly that the glasses for transmitting light into the magazines are clear and without fracture.

OFFICERS IN CHARGE OF DIVISIONS.

30. OFFICERS IN CHARGE OF DIVISIONS are carefully to inspect their divisions when called to quarters for inspection or exercise, and satisfy themselves that everything belonging to their division is in its place, and in order for service, and in case of discovering any defect or deficiency will report it immediately to the Captain or commanding officer of the vessel.

31. They will be careful when instructing the men in their duties at quarters, to require a strict adherence to the prescribed mode of performing them, and to all the details of execution, so as to secure general uniformity and the efficiency which is dependent upon it.

32. Commanding officers of divisions of guns are frequently to examine the guns and all the iron work of the carriages, and see that they are kept free from rust, and especially the eccentric axles, elevating screws, and fighting bolts, which should be protected by tallow or other similar coating. The cap-squares should be frequently removed and the trunnions of the guns cleaned.

33. The ordinary duties of divisional officers, connected with the supervision of the clothing of the men belonging to their divisions, afford opportunities for giving counsel and advice, and other evidences of interest in the comfort of the men, which, if properly improved,

Digitized by Google

can hardly fail to produce highly beneficial effects, and the improvement of such opportunities is, therefore, strongly recommended.

MASTER.

34. The MASTER will see that the number of stoppers, preventer braces, slings for yards and gaffs, relieving tackles and other articles in his division which may be directed, are properly fitted and ready for use in action.

GUNNER.

35. The GUNNER will attend personally to the reception on board, and proper distribution of all ordnance equipments and stores.

36. He will see that the magazine equipments and stores are arranged therein in conformity to ordnance instructions. The powder tanks containing the several different descriptions of charges are to be stowed on their sides, with their lids next the alleys and hinges down; each description on separate racks, when practicable, so that they may be kept as distinct as possible, and may be found without a light by the magazine people.

37. The charges for ordinary firing are to be stowed nearest the entrance. In time of war the passing boxes are to have these charges kept in them ready for passing up at once.

38. The different charges for all classes of guns are distinguished by the color of the cartridge bags; "*white*" being used for "distant" firing, "*blue*" for "ordinary" firing, and "*red*" for "near" firing.

39. The lid ends of the powder tanks for service charges are painted of the same colors as the cartridge bags which they contain, are also distinctly marked with the calibre and weight of the gun for which the cartridges are intended. Tanks for priming powder must be marked "priming powder," and this powder may be put up in either of the kind of charges allowed which will make the best stowage, and in bags of the color used to distinguish such charges.

Tanks containing *saluting* powder are to be marked "saluting." It is to be kept in *red* or "*near*" firing bags. When there is not room for it in the tanks, the bags may be put in scuttled powder bar-

Digitized by Google

rels and stowed in the alleys of the magazine, and the barrels shocked as they are emptied.

40. No loose powder is ever to be taken or carried on board ship, and all, whether public, or private belonging to officers, must be safely stowed in the magazines.

41. All percussion caps or primers, or other articles containing percussion matter, must be kept in boxes prepared for the purpose, and the boxes must be stowed separately from other articles, in a dry and secure place in the store room or other safe place, with a good lock; the key of which must be kept by the commanding officer.

42. The fireworks, after *carefully removing all percussion caps and primers*, are to be stowed in their proper packing boxes on the racks in the passage.

43. All ammunition packing boxes and metal cases, are to be preserved and returned into store at the end of the cruise.

44. No coopering is ever to be done in the magazines of ships. Should powder be received on board in barrels, the hoops and heads must be started on the orlop or berth deck, before entering the magazine.

45. In stowing the shell rooms the empty shells, are to be placed at the bottom and the filled ones on top, each calibre and length of fuze to be marked on the boxes and stowed in separate tiers from top to bottom, so that each may be easily found and passed up as required.

46. The Gunner is to examine and satisfy himself frequently, whether the guns and all their equipments; the elevators and whips for supplying powder, shot and shells; the arm-chests, armory, and small arms; the "Supply" and "Reserve" division boxes, and other articles furnished as ordnance or ordnance stores, are in good order and in place, and make immediate report to the commanding or executive officer of any defects or deficiences which he may discover.

47. Unless prevented by special causes he will report the condition of the guns and equipments to the Executive Officer daily before 10 A. M. and at 8 P. M., and at any other time when he finds anything out of order.

48. Whenever the magazines are opened, he is to take every precaution to guard against accidents from fire, examine particularly that no one enters the magazine with any metallic substance about

Digitized by Google

him, and that no improper articles are introduced. He will also see that all the articles required for sweeping and removing loose powder are at hand, and that those operations are performed before the magazine is closed.

49. The tanks are never to be opened unless by special order, or when powder is actually required for service; and then no more of the lids are to be unscrewed than is necessary for immediate supply. The strictest attention to this regulation is required of the Gunner, as experience has proved that the preservation of the powder in good condition depends upon the entire exclusion of damp air.

50. When the guns are ordered to be drawn before entering into a friendly port, or when preparing for a salute, the Gunner is to be particularly attentive to assure himself that no shot is left in any gun.

51. The lowest calibre and class of guns when sufficient in number are to be used for saluting, and no heavier than their near firing charge is to be furnished for the purpose. Wads are not to be used in ports when saluting.

52. In a close harbor or when vessels are near enough to be endangered, the guns must be so pointed, *when practicable*, as to prevent the possibility of mischief in case a shot or wad should be left in them, notwithstanding the precautions taken.

53. In the absence or illness of the Gunner his general duties will devolve on a gunner's mate.

54. When a vessel returns from a cruise and is to be placed in ordinary, and her officers and crew are to be paid off, the Gunner is not to leave the ship, unless specially authorized by the Secretary of the Navy, until all the guns, powder, small arms, ammunition and other articles under his charge, shall have been examined and landed, and turned over to the Assistant Inspector of Ordnance or Navy Storekeeper.

55. It shall be the duty of the Assistant Inspector of Ordnance, or of the Officers who inspect the ship, to report to the Bureau the condition in which the articles under the charge of the Gunner may be transferred from the vessel, that his care and attention may be properly known to and appreciated by the Department.

Digitized by Google

CARPENTER.

56. The CARPENTER will ascertain and report to the Executive Officer that there are a sufficient number of tarpaulins to cover all the hatches leading to the fore and after orlops; that the pump-gear of every description is ready and in order for rigging the pumps, and that every preparation can be promptly made before going into action to free the ship, in case of receiving injuries below the water line.

He is also to examine and keep in order the force and channel pumps, the fire engine, the division tubs, and in short all the apparatus necessary to give a good and speedy supply of water in case of fire in action.

57. He is to be specially charged with the care and distribution of articles for stopping shot holes or repairing other injuries to the hull, which may be received in action, viz:—trowser slings for lowering men outside the vessel, to be provided with a pouch or pocket to contain a hammer and nails; shot plugs and mauls; pieces of pine board from eighteen inches to three feet long, and from twelve to fifteen inches wide, covered with felt or fearnaught; and patches of sheet lead with nail holes punched.

58. In case it shall not have already been done, the carpenter, under the direction of the Commander or Executive Officer of the ship, will draw a black line two inches broad on the ceiling of the ship to correspond with the ordinary height of the water line. On this is to be marked, by corresponding intervals and numbers, the position of the ports on the lowest of the gun decks. By this arrangement the position of a shot hole can be easily ascertained and communicated, and a remedy promptly applied.

YEOMAN.

59. The YEOMAN is to charge himself with, and is to be accountable for, all articles of ordnance stores which may be placed in the store room under his charge, and is not to issue or expend any article except by order of, or authority from, the Captain or Executive Officer.

60. On the return of a ship to be laid up at a yard, the Yeoman will be retained to deliver the ordnance stores in his charge into the hands of the Ordnance Officer or Navy Storekeeper of the yard, and if

Digitized by Google

these stores are found in good order, and to correspond with the books of invoice and expenditure, it shall be the duty of the Commandant of the Yard to give him a certificate to that effect, and the Commandant will then direct the Purser to discharge and pay him the wages which may be due to him. But if on the contrary, there is found to be a deficiency in the stores under his charge or that they are in bad order, the Ordnance Officer will report the same to the Commandant of the Yard, who will order a survey to ascertain the nature and extent of the deficiency, or injury, and whether either were caused by the Yeoman's negligence or fault.

61. Should the Commandant of the Yard be satisfied that the alleged injuries or deficiences, proceeded neither from culpable neglect nor dishonesty on the part of the Yeoman, the Commandant will direct the wages due the Yeoman to be paid him, and that he be discharged with a certificate of good conduct; but if the Commandant shall find just cause for suspecting fraud or negligence, he shall suspend the payment and discharge of the Yeoman until he shall report the case to the Bureau and receive the orders of the Department.

62. No Yeoman is to be knowingly *re-enlisted* as such without he produces a satisfactory certificate of his former good conduct as Yeoman.

Digitized by Google

GENERAL DISTRIBUTION AT QUARTERS.

63. The following directions for the general distribution of a ship's company at quarters, or for action, are intended to secure, upon the most important points, a degree of uniformity which will promote efficiency, and at the same time leave to the Captains the selection and arrangement of many individuals under their command according to their own views of the particular qualifications of each.

64. The CAPTAIN'S station, in action, is upon the quarter deck, unless some urgent cause should require his temporary presence elsewhere.

65. The officer next in rank to the Captain, or the Executive Officer; the Midshipmen acting as *aids* to the Captain; and the Signal Officer, are also to be stationed on the quarter deck.

66. The stations of the other Officers are to be regulated by divisions as follows:—

The guns upon each deck are to be numbered from *forward*, beginning with No. 1 and continuing aft in succession, each gun and its opposite being designated by the same number, excepting pivot and shifting guns, each of which is to have a separate number. The guns on each deck are then to be divided as equally as possible into three or two divisions, according to the number of Lieutenants or other watch officers on board, so that each division of guns and the persons belonging to it may be commanded by a Lieutenant or other watch officer. These divisions are to be numbered consecutively, designating the forward division on the lowest gun deck as the first division, and passing from the after division of one deck to the forward division of the next deck above it.

67. The command of these divisions of guns is to be assigned in the order of their numbers to the Lieutenants or other watch officers, according to their rank, assigning the first division to the officer next in rank to the Executive Officer. In case of a deficiency of watch officers, the quarter deck division may be assigned to a Passed or other Midshipman, who will act under the general supervision of the Executive Officer.

68. The next division in order is to be called the "*Master's Division*," and will comprise all those stationed in the tops and those appointed to the rigging, sails, steerage and signals.

Digitized by Google

This division is to be under the command of the *Master*, who is to be stationed on the quarter deck. He is to be assisted by the Boatswain, whose station will be upon the forecastle.

69. The next division in order is the "*Powder Division*," which will be under the general direction of the Second Master, or, in case there is no officer of that grade on board, of a Passed or other competent Midshipman. It will consist of all those stationed below the gun decks, excepting the "*Surgeon's division.*" The Gunner is to be stationed in the main and a Gunner's Mate or Quarter Gunner in the other magazine when there are two, and those persons of this division who may be stationed in the magazine passages and shell rooms are to be under their more immediate direction; and those of the Carpenter's Crew stationed in the hold or wings are to be under the more immediate direction of the Carpenter's Mate, who will be stationed with them. All reports, however, are to be made through the Commanding Officer of the division.

70. All the marines who may not be stationed in other divisions for action, are to form a "*Division of Marines*," which is to be under the immediate command of the Superior or Senior Officer of Marines on board. He will form his division on such part of the spar or upper deck as the Captain may direct.

71. The "*Surgeon's Division*" will comprise all the medical officers, the Chaplain, Purser, Professor of Mathematics, and such other persons as may be designated by the Captain, to assist the medical officers in action. The Surgeon or Senior Medical Officer will have the direction of this division, which will occupy the cockpit or such other convenient place as the Captain may direct.

72. Passed and other Midshipmen, Captain's and other Clerks, the Sailmaker, and other officers not enumerated, are to be assigned to the different divisions at the discretion of the Captain.

73 In distributing the Petty Officers, Seamen and others, to the guns and other stations in the several divisions, it is desirable, as a general rule, that those stationed at the same gun or near each other at quarters, should be drawn from different stations for working ship; so that a great loss at any one gun may not fall too heavily on any watch station.

Exceptions to this general rule may be advantageously made where the duties of men require their habitual attendance on particular decks. In such cases it will generally be advisable to station them at quarters near to the places of their ordinary duties.

Digitized by Google

(74.) TABLE

Shewing the number of men for the service of each kind and class of gun in use in the Navy, assuming the vessel to have the established complement.

	Pivot guns, 10 inch shell gun of 89 cwt., and 64 pdr. of 105 cwt.	8 inch shell gun of 63 cwt.	8 inch shell gun, 55 cwt. & 32 pdr. of 57 cwt.	32 pdr. of 51 cwt.	32 pdr. of 46 & 42 cwt.	32 pdr. of 33 cwt.	32 pdr. of 27 cwt.
On lower decks of ships of the line.		16 Men and Pr.Boy.	14 Men and Pr.Boy.				
On all other decks	16 Men and Pr.Boy.	14 Men and Pr.Boy.	12 Men and Pr.Boy.	12 Men and Pr.Boy.	10 Men and Pr.Boy.	8 Men and Pr.Boy.	6 Men and Pr.Boy.

The number of men to form crews of guns mounted on carriages of special character, is to be regulated as may be found most advantageous by the Commanding Officer.

75. In designating the petty officers and others to particular stations for action, it is assumed that the intelligence, skill and force of the men have been equally divided between the two watches, and that those in the starboard watch are all numbered by the odd numbers, as 1, 3, 5, &c., and those of the port watch by the even numbers, as 2, 4, 6, &c.

76. To preserve this equality and to secure the ability of those who may be on deck to prepare all parts of the ship for action at night, whilst the watch below are bringing up and stowing their hammocks, half the number of each gun's crew and of each division, are to be taken from each watch, as far as practicable.

77. In arranging the guns' crews, the first parts, as 1st Captains, 1st Spongers, 1st Loaders, &c., will, for guns having *odd* numbers, be taken from the *starboard*, and the *second* parts from the *port* watch. For the guns having *even* numbers the *first* parts of the guns' crews will be taken from the *port*, and the *second* parts from the *starboard* watch.

78. Where ports of the same number on opposite sides of the same deck, are both provided with a gun, guns' crews are only to be furnished for the guns on one side. Pivot and shifting guns are each to have full guns' crews.

Digitized by Google

79. The complements allowed to vessels in the Navy are so proportioned that guns' crews may be conveniently formed of about one-third petty officers and seamen, one-third ordinary seamen and one-third landsmen and boys, and this general arrangement is recommended.

80. At least one Quarter Gunner should be stationed at each division of guns; and a Gunner's Mate or Quarter Gunner in the small magazine and in each shell room.

81. Forms of quarter-bills for a ship of the line, a frigate, a sloop of war, and a steamer, arranged upon this plan and with reference to stations in watches are placed in the appendix.

Though it is not proposed to require an exclusive adherence to these forms, yet their adoption when practicable, and the application of the same principle, to all vessels, is strongly recommended, that as near an approach to uniformity may be secured as peculiar circumstances will permit. If deviations from these forms are made, satisfactory reasons must be assigned when required by the Inspecting Officer.

82. Before permanently assigning the individuals which form a gun's crew, to the performance of particular duties connected with its service in action, it is important to ascertain their respective qualifications as far as may be practicable, by questioning, or by exercising them at guns. The Captains and Second Captains especially should be selected from those in whose skill, coolness and judgment, the greatest reliance can be placed, without regard to their ratings, though at the same time care should be taken to avoid stationing men of a higher rating than the Captains of the guns, to perform subordinate duties at the same guns.

83. Spongers and Loaders rank next in importance, and with activity and coolness, should possess the necessary physical strength.

84. For Handspike men, weight is important in addition to strength and coolness.

85. Very careful men should be selected for attending to the Elevators and Powder-scuttles on the different decks, as well to prevent noise and contention among the Powder-boys, as to guard against accidents, and speedily to repair such as may occur.

86. Unless some special reason should require a different arrangement, the Boarders, should be taken from the Captains, Loaders, Spongers and Handspike men, of the guns; the Firemen from 1st Train-tackle men, and pump men from 2d shot men.

Digitized by Google

87. One Fireman is to be selected from each gun, and such number from the Master's division as the Captain may direct. Should a greater number be required, the *call for firemen* is to be repeated, and the 1st division of boarders (without pistols) is to join and assist them.

88. A Pumpman is to be selected from each of those guns only which are upon the deck where the pumps are worked.

89. Boarders are to be divided into two divisions, called first and second. Eight boarders are to be selected from each gun's crew consisting of fourteen or more men, six from each of those composed of ten or twelve men, and four from each when brought below ten men.

90. For "repelling boarders," those persons who belong to spar deck guns, not selected for boarders, such of the master's division as are not selected as "*Small Arm men*," all but five from those remaining at each of the lower deck guns, and all but three at each of the guns on other gun decks, are to be selected as Pikemen, and are to be divided like the boarders into two divisions.

91. Should it be necessary to call *all* the men from the guns to repel an enemy upon an emergency, those whose arms are not already designated are also to be armed with pikes.

92. The 1st Divisions of boarders and pikemen should be taken from the second parts of the guns' crews, and the 2d Divisions from the first parts.

93. Small arm men are to be selected from the "*master's division.*"

94. The Captain will designate the different hatchways which shall be used by the boarders and others from each gun, when they are called upon deck at quarters.

95. The use of *fire-arms* in the tops being considered dangerous and only advisable under very peculiar circumstances, they are never to be used there without the express direction of the Captain.

Digitized by Google

DUTIES AT QUARTERS

FOR

BATTLE OR GENERAL EXERCISE.

CAPTAIN.

96. The CAPTAIN when at general quarters, either for exercise or in action, is to superintend and take the general direction of every thing connected with the management of the ship, and the service of her armament.

97. Before commencing a general exercise, he will carefully inspect the ship, to ascertain that all the required and proper preparations have been made for battle. When time and other circumstances will permit, he will also make this inspection before going into action, and when prevented from making it personally he will direct it to be made by the Executive Officer, unless more important duties should interfere.

98. When engaged with an enemy at so great a distance as to require the guns to be elevated, he will, if practicable, cause the distance to be ascertained by observation, and when that cannot be done, will estimate the distance, and from time to time send directions to the officers of gun divisions, for what distances the sights of their guns should be set, and the nature of the projectile, and of the cartridges to be passed up, whether for "distant," "ordinary" or "near" firing.

99. He will determine, and direct, when two shot may be fired; when "quick-firing" may be permitted, when small arms shall be loaded and distributed, when boarders shall be called up, and when they shall assail an enemy. He will also receive the reports from all officers commanding divisions.

Digitized by Google

EXECUTIVE OFFICER.

100. The EXECUTIVE OFFICER, under the direction of the Captain and with the aid of the Master, will work the ship when in action or at general quarters.*

101. In action, on board of line of battle ships and frigates, the spar deck divisions or such parts of them as are required, may be called upon to act as sail-trimmers, in addition to the brace men and marines. Should a greater force be needed for this purpose the Executive Officer will call up the sail-trimmers from below, and if still greater force should be required the 1st division of boarders. In sloops of war and single-decked vessels generally, this service will be performed by the Master's division, the sail-trimmers and the marines.

102. When orders shall be given for the men belonging to the spar deck divisions of guns, or to the marines, to assist in working ship, or in managing the sails, the officers of those divisions are to give prompt obedience themselves, and to require it from their men, in the performance of those duties, until they shall be *directed* to resume their ordinary stations.

103. The SIGNAL OFFICER, is to see that every thing is prepared for making and answering signals promptly, and will make all such as the Captain may direct.

He will note and report to the Captain all signals that are made to or by other vessels of the squadron, and note the time when each signal was made and from what vessel. He will also observe and report any material changes which may take place in the positions of the vessels of the squadron, or of other vessels in sight.

---

*This arrangement continues to the Executive Officer his usual duties when all hands are called for other special purposes; it also places him where he will always be immediately informed of all the evolutions ordered by the Captain, as well as of the objects proposed to be accomplished by them, and in case any accident should disable the Captain, the Executive Officer will be ready to carry out his views without mistake or delay.

By employing the Master as an assistant to the Executive Officer, additional security is given against any confusion or delay, which might otherwise be caused by the inability of either of the superior officers to continue the performance of their duties.

Digitized by Google

MASTER'S DIVISION.

104. The MASTER will cause the persons in his division to sling the yards and gaffs, to stopper the topsail sheets, to lead out the preventer and other braces, and will see that they are clear and toggled to prevent them from unreeving. He will have stoppers at hand in the chains and tops, for stoppering the lower and topmast rigging and snaking stays and backstays; hatchets ready for clearing away any casual incumbrances from the guns; and will cause proper arrangements to be made for applying and securing grapnels if they should be required. He will see that proper hauling lines are prepared for sending small arms and ammunition into the tops, and direct particular men to procure and attend to them, should the Captain give orders to that effect. He will cause the boat and boom covers to be hauled over and securely stopped down; the relieving tackles to be hooked and ready for use; a compass to be placed to steer by; and see the spare tiller at hand, and the chronometers and other instruments put out of the reach of shot.

105. He will see that the hammocks are properly stowed and covered, that the small arm men of his division receive their arms when directed, and that they deposit them in proper places when they lay them by to perform other duties. When arms are allowed in the tops he will attend to having them sent there, and will be watchful that they are not so used as to expose the sails and rigging to danger from taking fire.

106. In case of any probability of an engagement, when the ship is on soundings, the Master will have the ground tackling ready and clear; boats ready for getting out, and every preparation made for towing, warping, anchoring and getting springs upon the cables; and have leads and lines in the chains. If at anchor, he will have the boats dropped astern and the oars secured to the thwarts, and if directed have the plugs taken out that the boats may sink.

107. In action, besides aiding the Executive Officer in working ship, the Master is to pay special attention to the steerage of the vessel, and to the rigging, sails and spars, and will see that the stoppers are properly applied and damages repaired as speedily as possible.

108. In vessels where there is no signal officer, the Master in action or general exercise may be directed to perform the duties of signal officer.

Digitized by Google

109. The BOATSWAIN will aid the Master in his duties; and, especially on the forecastle, will see that the rigging is kept clear, and all damages promptly reported and repaired.

POWDER DIVISION.

110. *The officer commanding* the division on the orlop or berth deck, according to the class of the vessel, is charged with the following preparation for exercise or action, namely: He will have the fire screens let down, and the light-rooms and the deck under his charge lighted. He will see that the powder elevators and the shot and shell whips are in place, and in working order; that the hose is screwed to the force pumps and ready for use; that the gunner and his mates at the magazine hatches and scuttles, and the persons stationed at the shell-room scuttles, are ready to open them when the order is given; that all the precautions mentioned in the duties of the Gunner and Carpenter have been taken against fire, namely:—that the hatchways of the decks above are properly covered; that the air ports are closed and secured; that the division tubs are filled, and that wet swabs are placed by them, and under all the scuttles through which the passing boxes pass; and that a proper supply of fresh water is provided for the use of the men. He is also to see that the means which are provided for the purpose of lowering the wounded from the several decks are ready and properly fitted, and that the wounded when lowered down are conveyed to the part of the vessel set apart for the Surgeon's division.

111. He will also see that all obstructions to the safe and rapid passage of powder, shot, and shells are removed, and when every preparation for action has been made in his division, will report it ready to the Captain.

112. When called to quarters for general exercise or action, he will receive the keys of both magazines from the Commanding Officer of the vessel, and will deliver the key of the main magazine to the Gunner, and of the other magazine to the Gunner's Mate in charge of it.

113. While at general quarters, he will see that the men preserve their proper stations, and will give particular attention to the rapid and correct supply of powder and projectiles to the various divisions

Digitized by Google

as well as to the preservation of silence, order, and coolness in the performance of these most important duties.

114. When the order is given from the Commanding Officer of the vessel to open the magazines and scuttles, the Gunner and Gunner's Mate will receive the keys from the Officer in charge of the powder division, repair to their respective scuttles, put on their magazine dresses and shoes, divest themselves of articles of metal, and see that the men stationed with them do the same; they are also to see that wet swabs and cans of fresh water are provided, and then await the orders of the officer of the powder division to open the magazines.

115. As soon as the magazines are opened, and orders are given for opening the tanks, the Gunner and his Mate and their assistants in their respective magazines will do so at once, and begin to pass up charges of the kind ordered by the Commanding Officer, to the men stationed on the deck above to receive them. These men are to be particularly attentive to observe the changes made from time to time in the color of the labels on the tops of the passing boxes,* designating the kind of charge required at the guns, and will give notice to the persons stationed in the magazines to pass up charges corresponding to those colors.

116. When no powder is used in exercise, the Officer in charge of the Powder Division will see that such substitutes for the various charges as the Commanding Officer may direct are passed up, so that the number of rounds and the kind of charge, whether "distant," "ordinary," or "near" may be ascertained, and compared with those ordered. Should any defect, or deficiency in the arrangement for giving a full supply to the guns be discovered, it is to be reported immediately to the Captain, in order that a remedy may be applied as speedily as possible by additional men or other proper means.

---

*For gun decks, the passing boxes for shot and shell guns, the construction of which will permit them to be fired with the same charges, are painted *black*. If any of the guns, on gun decks, should require lighter charges, then boxes are to be painted *red and white*. For spar decks of vessels when the guns require lighter charges than those upon the gun decks, and also for sloops of war or steamers, the passing boxes for shot guns to be painted *black and white*, and for shell guns *red*.

The lids of passing boxes are fitted with a thin plate of copper, painted with the colors which serve to designate the "*near*," "*ordinary*" and "*distant firing*" cartridges, and arranged so as to move between the two thicknesses of leather which form the top of the lid, and to show through a circular hole in the uppermost one the distinguishing color of the kind of charge required.

Digitized by Google

117. In passing the cartridges to the guns, they are to be passed up from the magazine to the orlop or berth deck, before they are put into the passing boxes.

118. In ships of the line of three decks, both of the two lower gun decks have guns which may use charges of the same weight, but the upper gun-deck guns require lighter charges, and with the exception of the chase and shell guns, those on the spar deck lighter still.

119. To prevent mistakes or confusion which might be attended with dangerous consequences, separate scuttles for passing cartridges from the magazines are necessary for each class of guns, as well as other arrangements for passing them to the proper guns.

120. The cartridges are to be passed as follows:—

To supply the *lower gun-deck* of *a ship of the line*, the guns forward of the shell guns are to be supplied from the starboard scuttle of the fore magazine, to and through a scuttle in the forward part of the port side of the fore hatchway.

121. The shell guns are to be supplied from the centre scuttle of the after magazine to and through a scuttle in the port side of the after part of the after hold hatchway. The guns abaft the shell guns, or the after division, is to be supplied from the port scuttle of the after magazine, to and through a scuttle in the after part of the port side of the spirit-room hatchway. The empty boxes of all the lower deck guns are to be passed down through scuttles on the opposite sides of the same hatchways through which the full boxes are passed up. *Full boxes* are passed to their respective hatchways along the *port side* of the orlop deck, and the *empty boxes* along the *starboard* side to their magazine scuttles.

122. To supply the *main deck* of a ship of two decks or the middle gun-deck of a ship of three decks, the guns forward of the shell guns are to be supplied from the port scuttle of the forward magazine to and by an elevator in the after part of the port side of the fore hatch—empty boxes to be returned by the elevator.

123. The shell guns are to be supplied from the centre scuttle of the after magazine to and by an elevator in the forward part of the port side of the after hold hatchway—empty boxes returned by the elevator.

124. The guns abaft the shell guns, or the after division, to be supplied from the starboard scuttle of the after magazine to and by an elevator in the forward part of the starboard side of the spirit-room hatchway.

Digitized by Google

125. In ships of the line of three decks, the *upper gun-deck* guns which are forward of the shell guns on that deck, and the forward chase guns on the spar deck, are to be supplied from the starboard scuttle of the forward magazine to and by an elevator in the forward part of the port side of the main hatch.

126. The shell guns of that deck, all of which should be next to the forward gun of the after division, and those of the spar deck, are to be supplied from the centre scuttle of the after magazine to and by an elevator in the forward part of the starboad side of the after hold hatch —the empty boxes to be returned by the elevator.

127. The guns of the upper gun-deck abaft the shell guns, or the after division, and the after chase guns on the spar deck are to be supplied from the starboard scuttle of the after magazine, to and by an elevator in the forward part of the port side of the spirit-room hatch—empty boxes returned by the elevator.

128. The spar deck guns of all ships of the line, excepting the the heavy chase and shell guns, are to be supplied from the centre scuttle of the forward magazine, and thence to and by an elevator in the scuttle forward of the foremast to the forecastle—the empty boxes to be returned by the elevator.

129. *In Frigates or Razees*, the first division of the gun-deck guns and the forward chase guns of the spar deck, will be supplied from the port scuttle of the forward magazine to and by an elevator, or by hand, through the port side of the after part of the fore hatch. The second division from the centre scuttle of the same magazine to and by an elevator, or by hand, through the fore part of the port side of the main hatch; and the after division of guns on the gun-deck and the after chase guns of the spar deck, from the port scuttle of the after magazine to and by an elevator, or by hand, through the steerage hatch.

130. The forward half of the light guns of the spar deck from the starboard scuttle of the forward magazine to and by an elevator through scuttles forward of the foremast. The after light guns of the spar deck from the starboard scuttle of the after magazine to and by an elevator in the after part of the spirit room hatchway. The full boxes to be passed to the hatchways along the port side of the berth deck, and the empty boxes, when returned by the elevators, to be passed along the satrboard side of the same deck, to their respective scuttles.

131. *In Sloops and smaller vessels*, the guns forward of the shell guns are to be supplied through a scuttle in the fore hatchway. The shell

Digitized by Google

guns through one in the main hatchway; and the guns abaft the shell guns through a scuttle in the after hatchway. If there are no broadside shell guns, the forward half of the guns are to be supplied through the fore hatch, and the after half through the after hatchway. Full boxes are to be passed along the port side, and empty boxes along the starboard side of the berth deck.

132. Shot are to be passed up the main hatches for the after divisions and up the fore hatches for the guns forward of the shell guns. The shells are to be passed up through the after hold hatch, or the hatch next abaft the main mast. Whips are to be used for this purpose.

133. The CARPENTER will see that the hatches which lead to the berth deck or orlop are properly covered with gratings and tarpaulins, and that the air ports are closed and secured.

134. He will then cause all the pumps to be rigged, namely: the main pumps for freeing the ship in case of leaks, and the force and channel pumps and the engine to supply water for extinguishing fire.

135. He will attend particularly to the preparations for stopping shot holes, and see that all the articles enumerated in his general duties are distributed among his mates and crew.

136. He will, when directed, cause the cabin and other bulk heads to be taken down, and every other obstruction which comes within his department, and may interfere with the working of the guns or the passage of ammunition, to be removed, and having performed this service, will report to that effect to the officers of the divisions in which such obstructions existed.

137. When these preparations are completed, he will see that the men under his direction are in their proper stations, and when all their preparatory duties have been performed, will so report to the commanding officer of the powder division.

138. During an action, the Carpenter will attend the pumps, sound the well frequently, and should he discover indications of serious injury below the water-line, will immediately make them known personally, either to the Commanding or to the Executive Officer, and to them only.

139. Such of the Carpenter's Crew as are stationed in the wings or on the orlop in line of battle ships or on the berth deck in other vessels, will be constantly on the look-out for shot holes.

When a shot enters, they are to make its position known by

Digitized by Google

reference to the number of the ports under, or near, which it is found, and its distance below or above the water-line as shown by the interior line corresponding to it, already described in the general duties of the carpenter; and are also to apply such remedy themselves as may be in their power.

The MASTER-AT-ARMS, assisted by the ship's corporals, will see that the galley fire, and all unauthorized lights are put out, and that the lamps for the orlops and light-rooms are lighted, properly trimmed and in place.

140. After the magazines have been closed and secured, and the retreat has been beaten, the Master-at-arms will see that the lights in the light-rooms are extinguished, and apply to the Commanding or Executive Officer for permission to renew the usual lights and fires.

141. The SURGEON or senior Medical Officer will see that all necessary preparations are made for the reception and treatment of the wounded in the part of the ship which may have been set apart by the Captain for that purpose, and report to him when such preparations are completed.

142. He will cause a sufficient number of *tourniquets*, or temporary substitutes for them, to be distributed to the different divisions, and to the men in the tops, and he will take care that the persons in his division and such others as the Captain may direct are instructed in the use of tourniquets, to prevent as far as possible, any dangerous loss of blood before the Surgeon or the assistants can attend to wounded men.

OFFICERS COMMANDING DIVISIONS OF GUNS.

143. Each officer Commanding a Division of Guns is to see that all persons belonging to it are present, that all the prescribed arrangements are duly and promptly made; that every article designated for use in the division is in order, and in its place; that the decks are wet and well sanded; that the hand swabs at the guns are wet, and that the small arms of his division are properly loaded at the time which may be directed by the Commanding Officer.

144. He will report to the Captain when all preparations have been made for action, and also, after action or exercise, when the guns have been properly secured, and the stores and implements belonging to his division have been returned to their places.

Digitized by Google

145. In action he will cause the wounded of his division to be properly conveyed to the Surgeon.

146. He will see that the hatchways leading to the orlops of line of battle ships, and to the berth deck of frigates and sloops of war, are covered by the Carpenter's Crew, and the scuttles, elevators, and whips properly prepared for passing powder, shot, and shells.

147. He will be particularly careful to prevent the men from loading the guns improperly or otherwise than may be specially ordered.

He will see that the guns are very carefully pointed and properly elevated to avoid too high firing or other waste of shot, and that all unnecessary noise is prevented. In case of accident to the powder-passers he will promptly supply their places by such men as can best be spared from his division.

148. He will also take care to prevent confusion at the powder scuttles and elevators at the hatchways in his division, and that all orders which require it are duly passed to others.

149. He will take care that each gun is provided with all the "*Equipments and Implements*" necessary for its use in action, which he will see and report to be in place. For broadside guns, whether mounted on ordinary truck carriages or on slides, these are to be as follows, viz:

ARTICLES.	Where they are to be carried when the gun is secured.
Carriage complete, with bed and quoin, or elevating screw.	In place.
Breeching with shackle bolts and pins.	do.
For Friction Carriages a compressor, pivot bolt and housing chock.	do.
Two side-tackles.	Hooked to the side tackle bolts on each side of the port and of the carriage.
One train-tackle.	Hooked to the side tackle bolts in the side with the parts of the fall round the breech of the gun.
Two handspikes.	Resting on the bed & bed bolt.
One tompion with laniard and wad.	In the muzzle of the gun.

Digitized by Google

ARTICLES.	Where they are to be carried when the gun is secured.
One sponge and cap.*	On the beam or carling over the starboard side of the gun.
One rammer.*	On the beam or carling over the port side of the gun.
One lock with string and vent plug complete and apron with strap.	In place on the gun.
One breech sight and apron.	do.
One reinforce sight and apron.	do.
Two priming wires and one boring-bitt with beckets for the wrist.	On the inside of the brackets of the carriage near the breech.
One fire bucket with laniard.	On gun-decks, close to the side, near the beam over the gun; on spar-decks, round the capstan and the boats forward.
One battle lantern, with candle or lamp trimmed and primed, but provided for gun-decks only, none for spar-decks.	In the fire buckets.
One battle axe.	Against forward side of carling over starboard side of gun.
One hand swab.	On the breast piece of the carriage.
Two chocking quoins, for truck carriages.	Between the brackets and the bed.
Two laniards for each half port.	In place.
Laniards, chain pendants, runners and tackles for tricing up, and bars and keys for securing lower deck ports.	In place.
Seven shot, for cannon.	In a shot grommet under the gun.
For shell guns, one shell in its box.	Between the trucks, on the port side of the gun.
Twenty selvagee wads.	On the breast piece of the carriage, strung on a pin placed for the purpose.
Two housing chocks for lower deck guns.	Placed before the *front trucks*, when the gun is run in for housing.

* The rammers and sponges belonging to the broadside guns of spar-deck divisions of all ships having topgallant forecastles, or other light decks, may be kept under the forecastle or light deck, when not in use. In other ships they are to be kept at the guns, inside the brackets.

Digitized by Google

150. He will also assure himself that the following articles, which may be required, are in readiness in his division, and prepared for use—namely: two rattles for calling boarders; one division tub with fresh water; one spare bed and quoin; two spare gun trucks; four spare handspikes; two worms; two ladles; two scrapers; one bristle-sponge; one wire sponge, four wet swabs, and three spare breechings—and if any of the guns are on slides, a transporting axle and trucks and a spare pivot bolt. Of these articles the worms, ladles, scrapers, sponges, and spare breechings, are to be becketed up between the beams and carlings on the gun-decks, and those for spar-decks will be kept at hand in the store-room, or other convenient place.

151. He will take care that the Quarter Gunners of his division provide the two division boxes marked "*Supply*" and "*Reserve*;" and that they respectively contain the following articles, all in good order, viz: In the *Supply* box a waist-belt for each boarder, furnished with frogs for a sword and for a pistol with its cartridges and percussion caps; and a box containing fifty primers and a thumbstall, for the 1st and 2d captains each, of each gun, fitted to be attached to the waist-belt.

In the *Reserve* box, one drill bow, three vent drills, one vent punch, one gun lock and string complete, two boring bitts, three priming wires, two thumbstalls, one primed match, four boxes of primers, one box of spur tubes, one spare lock-string for each gun, and one fuze wrench. These boxes are to be placed by the Quarter Gunners in their respective divisions, near the mast and on the opposite side to that engaged.

Digitized by Google

BROADSIDE GUNS.

STATIONS AND GUN NUMBERS OF GUN'S CREWS.

152. The following are to be the *gun numbers and stations* for a gun's crew composed of sixteen men and a powder-boy, when working broadside guns: Nos. 1 and 2 being at the breech of the gun, and Nos. 3 and 5 nearest to its muzzle.

	Gun Nos.		
First Loader	3	5	First Sponger . . .
Second Loader	4	6	Second Sponger . . .
First Shotman	7	8	Second Shotman . .
First Side-tackleman . . .	13	14	Second Side-tackleman
First Port-tackleman . . .	15	16	Second Port-tackleman
First Train-tackleman . . .	11	12	Second Train-tackleman
First Handspikeman . . .	9	10	Second Handspikeman
First Captain	1	2	Second Captain . .

Powder boy near the Midships and to port of the gun.

153. For a gun with *fourteen men*, or with *twelve men*, the higher numbers are those to be omitted, and the stations and duties of all the others remain unchanged.

154. With a gun's crew of *ten men* all the numbers continue with the same stations and duties, excepting No. 10 who becomes Train-tackleman.

155. With a gun's crew of *eight men* numbers from 1 to 7 inclusive retain the same stations and duties; No. 2 will, in addition to his duties as 2d Captain, also attend to the handspike, and No. 8 becomes Train-tackleman.

156. With a gun's crew of six men all the numbers retain the same stations and duties, excepting that No. 4 also acts as Shotman, and No. 2 attends to the handspike and train-tackle in addition to the duties of 2d Captain.

Digitized by Google

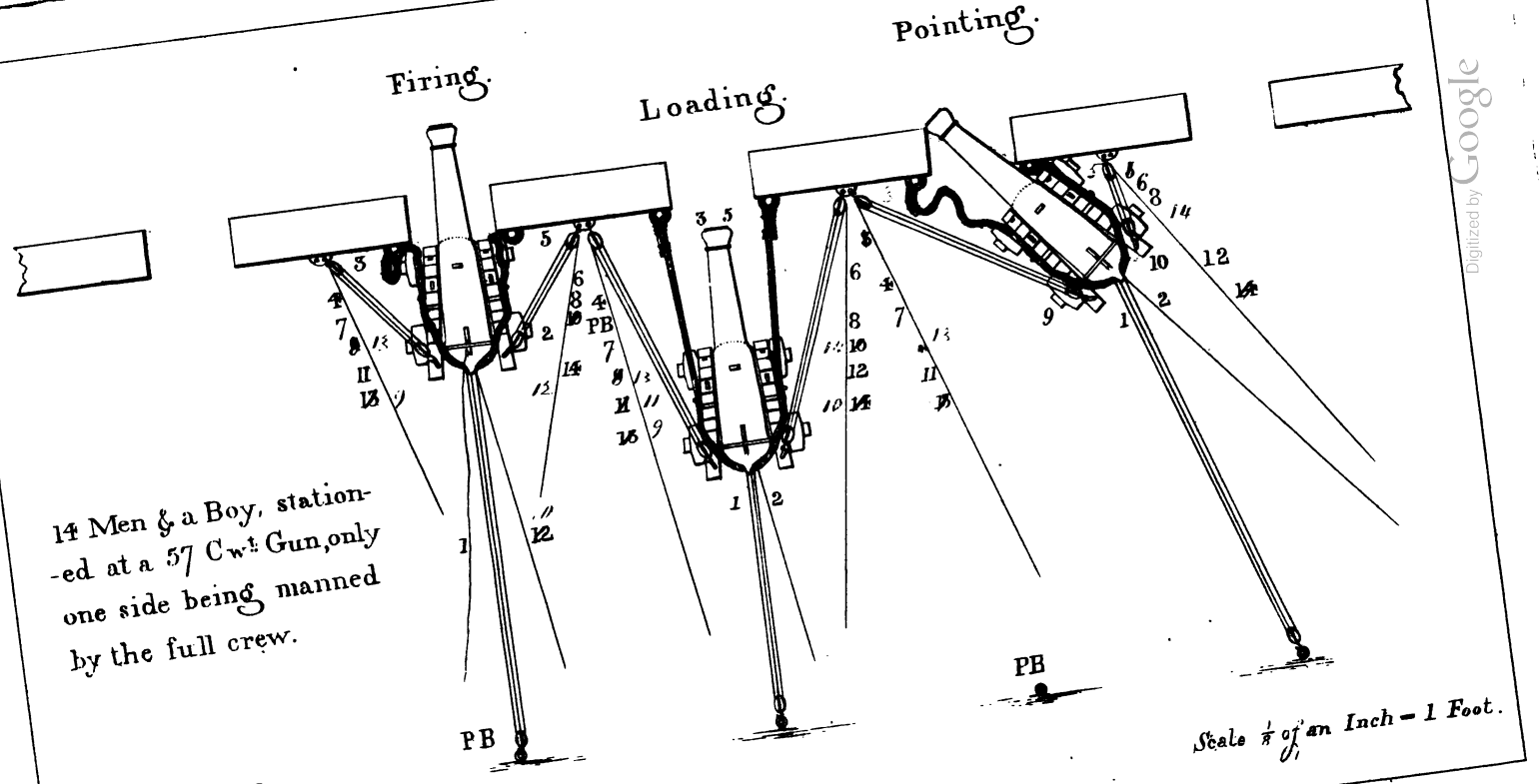

14 Men & a Boy, station-ed at a 57 Cwt. Gun, only one side being manned by the full crew.

Scale $\frac{1}{8}$ of an Inch = 1 Foot.

Digitized by Google

Digitized by Google

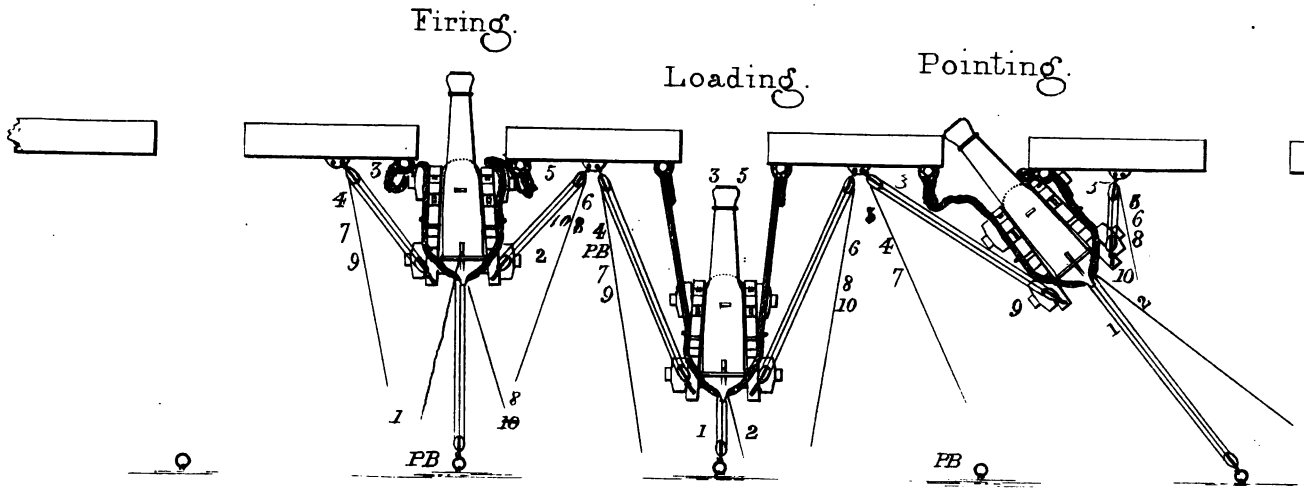

10 Men & a Boy, station-
-ed at a 42 Cwt Gun, only
one side being manned,
by the full crew.

Scale, ¼ of an Inch = 1 Foot

C.R.Stallwagen

Digitized by Google

Digitized by Google

PREPARATORY DUTIES OF GUNS' CREWS.

157. Some of the more important duties of the different persons composing a gun's crew are indicated by their stations in paragraph 152. When *preparing for action* or general exercise the several persons, belonging to a gun's crew of a broadside gun having *twelve or more* men, will attend to the following particular *duties of preparation*, viz:

158. The 1ST CAPTAIN commands, sees his gun cleared and cast loose, portlid unbarred ready for tricing up, or half ports taken out; side and train-tackles hooked and moused, the side tackle to the side training bolt, and the train-tackle to the eye bolt in the deck in rear of the gun; casts loose and middles breeching and places selvagee straps and toggles amidships; takes off lock apron and hands it to the train-tackleman, who places it amidships; buckles on his waist-belt, keeping the primer box in front; beckets a priming wire to his wrist; puts on and secures his thumbstall on his left thumb; and sees that the gear and implements for the service of the gun, are all in place and ready for use, and that the men are properly equipped.

When the gun is ready for action he sees that the men take their proper positions, and reports to the Officer of the sub-division to which he belongs.

159. 2D CAPTAIN assists in casting loose and middling breeching; takes off and places amidships sight aprons, selvagee-straps and toggles; handles quoin; provides thumbstalls, priming wires and boring-bitt, and equips himself with the first two; clears lock-string and lays it in a loose coil round the lock, convenient for use. At Friction Carriages he removes the housing chocks. In buckling on his belt he keeps the primer-box in front; and when the match is needed he provides and uses it.

160. 1ST LOADER, aided by 1st Sponger, casts loose port-laniards, removes upper half port, and passes it to the men on the port side of the gun, who lay it amidships; lets down the lower half-port. On *lower decks* casts off port-laniards and muzzle-lashing; removes port-bar and passes it to the men at the port side of the gun, who lay it amidships; bears out port. On all decks places hand swab and chocking quoin near the ship's side on the port side of the gun; aids 1st Sponger in taking out tompion; takes down and passes rammer to 2d Sponger.

Digitized by Google

161. 1st Sponger casts loose port-laniards and aids 1st Loader in removing upper half-ports and letting down lower ones, and on lower decks in removing the port-bar, bearing out the port and taking off the muzzle-lashing; takes out tompion and passes it to 2d Sponger, who hangs it amidships; places chocking quoin on the starboard side of the gun, near the ship's side.

162. 2d Loader assists in casting loose; places shot grommet and shot on the port side and in rear of the gun when the gun is run in; sees the wads in place; hooks double block of side-tackle to side training bolt, on the port side of the gun; and at *Friction Carriages* sees the compressor clear and in working order.

163. 2d Sponger assists in casting loose; takes down the sponge, takes off the cap and lays the sponge on deck, on the starboard side of the gun, with the head toward the breech, and hangs the cap out of the way; receives the rammer from the 1st Loader, and lays it, head toward the breech, alongside of the sponge; hooks double block of side tackle to the side training bolt, on the starboard side of the gun.—At Friction Carriages, where there are two compressor bars, attends right compressor bar.

164. 1st Shot and Wadman assists in casting loose; provides a sword and pistol for each Second Boarder of the gun, and shot, shells and wads.

165. 2d Shot and Wadman assists in casting loose; provides a sword and pistol for each First Boarder of the gun, and additional shot, shells and wads.

166. 1st and 2d Train-tacklemen lead out, hook and mouse train-tackle. The 1st Train-tackleman takes down the fire bucket, and places it and the lantern in their appointed places.

On gun decks the lantern should be hung up in the rear of and between the guns, and lighted when ordered by the Captain; and the fire-bucket directly in the rear of the gun. In single-deck ships the bucket may be laid on the deck, or hung up in any convenient place, in rear of and near to the gun.

167. 1st and 2d Handspikemen take out the handspikes on their respective sides, and standing between them and the side of the ship, place the heels of their handspikes on the steps of the carriage and under the breech of the gun, and raise it so that the quoin may be eased and the lower half-port let down, or on lower decks the bed and

Digitized by Google

quoin adjusted. They then lay the handspikes on deck parallel with the axis of the gun, clear of the trucks, flat side down and heels to the rear.

168. POWDER-BOY repairs to the hatchway for his passing-box and cartridge, which having received he returns and stands a little to port and in rear of the gun, keeping the passing-box under his left arm and the cover closely pressed down with his right hand.

169. When there are are *fourteen or more* men at a gun the PORT-TACKLEMEN AND SIDE-TACKLEMEN, on lower decks, lead out port-tackle falls and assist in tricing up the port, and when high enough belay the fall.

170. With a gun's crew of *ten men* No. 10, and with a gun's crew of *eight men* men No. 8, will act as Train-tackleman, and attend to the preparatory duties allotted to that station; and the 2d Captain to the hand-spike, and the 1st Captain to the quoin, in addition to their other duties.

171. When the gun's crew consists of only six men, the Second Captain will also attend to the preparatory duties of the Handspike and Train-tacklemen, and No. 4, or 2d Loader, will also attend to the preparatory duties of No. 7, or 1st Shotman.

172. In the temporary absence of the first Captains, Loaders or Spongers, when at quarters on one side, their Seconds will take their places and perform their respective duties.

173. With a gun's crew of *ten* or *more* men, No. 7 will take the place of No. 4, and No. 8 of No. 6, when Nos. 4 and 6 are absent temporarily.

174. The QUARTER GUNNERS of the gun divisions will attend to the "Supply" and "Reserve" boxes of their divisions, and distribute the belts, primer boxes and other articles which they contain, to the guns' crews, as soon as practicable, and then keep themselves ready to furnish any reserved or spare articles which may be required.

175. The swords and pistols should be always available for the Boarders, at the shortest notice, but their particular disposition at quarters and at what time the pistols shall be loaded, will be determined by the Captain, as in his judgment circumstances at the time may require.

Digitized by Google

ASSEMBLING AT QUARTERS.

DIFFERENT CALLS.

176. A ship's company may be called to quarters by beat of drum, or by call of the Boatswain and his Mates; but the first mode is to be always used when practicable.

177. The *ordinary beat to quarters*, by drum, will be the signal for assembling at quarters, whenever it is intended that the guns and vessel shall be cleared for *action*, or for *general exercise;* and when called to quarters, for the above purposes, in any other mode, orders for clearing away the guns will be communicated verbally. Both sides are to be manned when this call is used.

178. The *ordinary beat* of drum for quarters, immediately *preceded* and *followed* by a *roll* of the drum, will be the signal for *inspection* at quarters.

179. The call for *Boarders* to repair to the spar-deck, will be by the *rattle* and verbal order, repeated by the Officer of each division of guns.

On the first call or order the first division only will repair to the spar-deck. If the call or order should be repeated, before the first division shall have returned to their guns, the second division will immediately repair to the spar-deck.

180. The call for "*Pikemen*," or to "*repel boarders*," will be a *long roll* of the drum, or verbal order, followed by the *rattle*, the first division repairing to the spar-deck, on the first call, and the second, on a second call, if given before those of the first division have returned to their stations.

181. *Sail-trimmers* from the gun-decks, will be called by passing the word for them, and by the Boatswain and his mates piping "*veer away.*"

182. The Boarders, Sail-trimmers and Pikemen of the spar-deck gun divisions, and of the Master's division, as well as the Marines, may

Digitized by Google

be *ordered* from their guns or ordinary duties without any "call" when the Captain may deem it proper.

183. The call for *Firemen* to repair to the spar-deck will be given *verbally*, and by striking the ship's *bell* rapidly.

184. Men called for any of the foregoing duties will, on reaching the spar-deck, form on the gangway upon the side not engaged with the enemy, unless otherwise directed at the time.

185. On the order, "to your quarters," all will return to their respective stations, at their guns or the rigging.

186. In assembling at quarters, unless directed otherwise, those men of the guns' crews who belong to the starboard watch will man the starboard guns, and those who belong to the port watch will man the port guns, except in the case of Steamers where the guns on both sides are manned by full crews.

187. When called to quarters, every person is to repair to his station promptly, and without unnecessary noise; and, unless the call be for inspection only, will commence at once to "clear ship" and prepare for action. If the call is made in the night, all persons sleeping in hammocks or cots which may obstruct the batteries or the free passage of powder, unless otherwise ordered, shall lash them up and hand them for stowage to the men appointed by the Executive Officer to receive them.*

---

* The Executive Officer of the ship should appoint a sufficient number of men in each watch for the purpose of stowing the hammocks of the watch below, in case of being called to quarters in the night, so as to prevent confusion and ensure the greatest possible despatch in clearing for action. The requisite number of men for this purpose is as follows:

For a Ship of the line, twelve men in each watch.
" Frigate - - ten " " "
" Sloop of War, eight " " "

By this arrangement four men will always be at hand to stow each netting. The stowage should commence in the middle and at each end at the same time, the men placed in the middle standing face to face and stowing towards the ends, while the others stow towards the middle of each netting. Hammocks make the best stowage on the bight and perpendicular, when that method can be followed.

Digitized by Google

MANUAL EXERCISE.

EXERCISE OF BROADSIDE GUNS.

188. The guns on one side only, are supposed to be manned, and to be loaded, run out, cast loose, all the preparatory arrangements completed and the men in their proper positions, the 1st Spongers and 1st Loaders being between the side-tackles and the gun. After which the exercise for broadside guns, mounted either on truck or friction carriages, will be in conformity with the following words of command and directions for their execution, namely:

I.—SILENCE!

189. At this preparatory order the strictest silence is to be observed. The Captain of each gun faces the port; the men look towards him and attentively wait for orders.

II.—PRIME! (See notes.)

190. The Captain of the gun lays back the hammer and with the priming-wire in his right hand clears the vent, feels that the cartridge is home and pricks it; then with his right hand takes a primer from the box, and shutting the box with his left hand, immediately puts the primer into the vent, pressing the wafer flat upon the lock-piece with his thumb.

III.—POINT TO THE OBJECT! (See notes.)

191. At this command the Handspikemen, standing abreast of the rear trucks and facing from the gun, take up their handspikes and face to the rear, ready to apply them as may be required.

Digitized by Google

All the other men on each side of the gun, man the side-tackles, except the 1st Train-tackleman who attends the train-tackle.

The Captain of the gun adjusts the breech sight according to the charge and to the distance given by the officer commanding the division, and then taking the lock-string in the right hand and stepping back clear of the recoil, with his right foot well advanced and flat upon the deck, his right knee bent, and his body inclined towards the gun, brings his eye in range with the *bottom* of the notch in the top of the breech sight and the point of the reinforce sight. He then directs the Handspikemen to ship their handspikes in the training loops, and assisted by the 2d Captain and by the men at the side-tackles, to train the gun until the sights are in a line with the object, giving the word "*starboard*" when the starboard tackle, and "*port*" when the port tackle is to be bowsed upon.* When mounted on a *Friction Carriage*, the gun is trained with train-ropes. When the gun is trained on the object, the Captain of the gun signifies it by the word *well*, and the Handspikemen unship the handspikes and lay them on the deck parallel to the gun, flat side down and heels to the rear.—The men at the side tackles keep them in hand and taut; and at *Friction Carriages* the compressor men tighten the *compressor*.

Should it be necessary to alter the elevation of the gun, the Captain of the gun gives the order to raise or lower the breech, and the Handspikemen immediately place their handspikes on the steps of the carriage, (keeping between the handspikes and the side of the ship,) and raise the breech. As soon as the quoin is free, the 2d Captain takes hold of it with both hands, while the *1st Captain regulates the elevation* by giving the word "*raise*" or "*lower*," always cautioning the Handspikemen to lower steadily and slowly when the gun has nearly the proper elevation.†

When the proper elevation is given, the 1st Captain gives the word "*well*," and the 2d Captain forces the quoin tight under the breech,

* If the gun is square in the port and it is requisite to train-sharp forward or aft, the object will be more readily effected by running the gun in to a taut breeching, and then running it out on the forward side of the port to train-sharp aft, and the contrary to train-sharp forward.

† If the gun is provided with an elevating screw, or with a screw quoin, it will be unnecessary to use the handspikes, unless considerable changes of elevation are required, as the 2d Captain directed by the 1st Captain, can adjust the elevation by the screw.

Digitized by Google

giving the word "*down*" as soon as he perceives the quoin supports the gun.

The Captain of the gun retaining his position for aiming, directs further alterations, if necessary, and then having the lock-string taut, and his eye in range, waits until the line of sight is brought on with or in proper position for the object, when he gives the word,

IV.—READY—FIRE! (See notes.)

192. At the word *Ready* the men drop the side tackles. The Captain of the gun tightens the lock-string, and the Traintackle men, keeping out of range of the recoil, hold up all parts of the tackle.* At the word "*Fire*" the Captain of the gun pulls the lock string with a *strong* pull, bringing his right foot quickly back to the left one, and his body erect, clear of the recoil of the gun. The Train-tackle men haul taut the train-tackle, and secure it, either by choking the luff, or by a half hitch round the strap of the single block, if the gun has recoiled to a taut breeching, but if not, all the men excepting 1st Captain, 1st Loader, 1st Sponger, and Powder-boy, assist the Train-tackle men in running the gun in. If the ship should be rolling deep, or in working the lee guns when there is much heel, the 1st Loader and 1st Sponger chock the fore-trucks with the chocking quoins as soon as the gun is in, placing the quoins under the trucks somewhat obliquely, so that they may be more easily removed.

If the gun has been much elevated the 2d Captain and Handspikemen level it for loading.

In firing lower deck guns, when it is necessary to lower the ports while loading the gun, the Port-tackle men stand with the port-tackle falls clear, and ready to lower as soon as the gun is fired. The Loader hauls the port-lid to its place by a laniard, which he hitches to the breeching shackle bolt. The Handspikemen, directed by the Captain of the gun, lay the gun fair for working the sponge and rammer through the port scuttle.

---

*This should be done to prevent the carriage from running over the block and fouling the train-tackle in the recoil. In moderate weather and smooth sea, or with Friction Carriages, it will not be necessary to hook the double block of the train-tackle, except when the gun does not recoil sufficiently for loading. The chocking quoins will then be sufficient to prevent the gun from running out.

Digitized by Google

If, from *any cause*, the firing should be delayed after the gun has been pointed, it should be carefully pointed again before the order to fire is given.

V.—SPONGE!

193. The Captain of the gun steps up to the breech, lays back the hammer and places the lock-string over it in a loose coil, clears the vent, and stops it closely with the thumbstall or vent plug. The 1st Sponger and 1st Loader step over the breeching, and place themselves by the muzzle on their respective sides. The 2d Sponger, standing close to and facing from the gun, takes up the sponge with both hands and passes it to the 1st Sponger, who receives it with the back of the right hand and the palm of the left hand downwards, puts it into the muzzle of the gun, and shoves it well down.

Then the Sponger resting his left hand and the Loader his right hand on the muzzle of the gun, with their other hands grasping the staff at arm's length, push the sponge home, and pressing it against the bottom of the bore, turn it *from* the sponger two or three times, that the worm may free the bottom of the bore from any substance which may have adhered thereto. They then draw out the sponge, and the 1st Sponger strikes the staff near the head against the swell of the muzzle to shake off any adhering substance. Should any burning fragments be drawn out, the 1st Loader extinguishes them with the swet swab, and the operation of sponging is repeated. Then the 1st Sponger returns the sponge to the 2d Sponger, who hands him the rammer, and lays the sponge on deck. The 2d Handspikeman examines and clears the sponge-head and worm.*

After sponging, the Captain of the gun will try the vent. If at any time he should be unable to clear it with the wire, he will use the boring-bitt† or vent-punch, and if these should fail he will have recourse to the vent-drill and bow, in charge of the quarter gunner.

---

*The officer of division will direct the Sponger to use the wire sponge occasionally to remove any thing left in the gun by the common sponge.

The Spongers and Loaders are to be careful to keep their bodies within the ports as much as practicable.

†The boring-bitt should be used with great care, as being of steel, it is liable to be broken off in the vent, and thus to spike the gun.

Digitized by Google

In every case of this kind, the obstruction, after it has been pushed down into the bore, should be removed with the wire or other sponge before loading.

VI.—LOAD WITH CARTRIDGE!

194. The Captain of the gun stops the vent, the Powder-boy moves up to the 2d Loader with the passing-box under his left arm, and his right hand on the lid, which he removes as he presents the mouth of the box.

The 2d Loader, facing from the gun, takes the cartridge from the box, and passes it to the 1st Loader, who puts it into the bore, with the seams sideways and tie outward, and shoves it well down with his left hand.

The 1st Sponger receives and enters the rammer in the same manner as he did the sponge, holding it with the right hand under and the left hand over. The 1st Sponger rests his left hand, and the 1st Loader his right hand on the muzzle of the gun, in the manner described in sponging, and with their other hands grasping the rammer at arms-length, shove the cartridge *home*, give it two smart blows, and letting go the rammer, fall back clear of the muzzle, and wait for the word of command from the Captain of the gun.

The Captain of the gun unstops the vent, and pricks the cartridge if it be home, and says "Home," but if it be not home, he *withdraws the wire*, stops the vent, and gives the order "ram home!" when the 1st Loader and Sponger resume their positions, and repeat the operation of ramming until the cartridge is home. At the word "Home," the rammer is withdrawn.*

The Powder-boy having delivered his cartridge, and seeing that the label corresponding to the color of the charge ordered by the officer of division is exposed on the top of his passing-box, repairs immediately to the hatchway from which he serves, passing on the opposite side of the deck to that which is engaged; carrying his box uncovered, with the mouth downward, and striking it, that any combustible matter may be dislodged before another cartridge is put in.

* Particular attention should be paid to the directions given for sponging the gun, and ramming home the cartridge, which have in view the safety of the men, and the risk of spiking the gun by bending the priming wire.

Digitized by Google

VII.—LOAD WITH SHOT OR SHELL!

195. The 2d Loader passes a shot and selvagee wad to the 1st Loader, who puts them into the bore of the gun, the wad last, and shoves them well down with his left hand.

The 1st Sponger then introduces the rammer, and assisted by the 1st Loader, pushes the wad and shot down, and rams them home as before, giving them, when down, two smart blows of the rammer, for the purpose of setting the wad in its place. The Sponger withdraws the rammer, and returns it to the 2d Sponger, who lays it on deck, by the side of the sponge.

When loading with a shell, the length of the fuze having been designated by the officer of the division, the 2d Loader takes the shell out of the box, and passes it to the 1st Loader, who enters it fairly into the bore, sabot first, and fuze upwards and outwards, and keeps his hand on it to prevent its falling out. The 2d Loader covers the box again, and passes it to the Shotman, who, on his return for another shell, sends the empty box below.

The 1st Sponger strips the leaden patch off the fuze, and passes the patch to the 1st Captain, as an evidence that the priming has been exposed.

The 1st Sponger, assisted by the 1st Loader, *pushes* the shell home firmly and carefully, without either ramming, which might injure the priming of the fuze, or turning the rammer, which might alter the position of the fuze in the bore.

No wad is to be used over the shell, except when the vessel rolls so heavily as to render it necessary, in which case it should be a selvagee wad.

When *two solid shot* are used together, no wad is to be placed between them; and no wad will be required over grape.

If in loading a shot should stick in the bore, no attempt should be made to force it down, but it should be withdrawn. This may be done with the ladle; by depressing the muzzle and striking the breech with a heavy wooden maul; or by striking the muzzle hand against the sill of the port.

If the impediment is caused by the shot, it should be thrown overboard at once.

Digitized by Google

The shot or shell being home, the 1st Sponger and 1st Loader, step over and take their places outside of the breeching, but within the side-tackles, with their hands on the handles of the chocking quoins, ready to remove them.

The Handspikemen will ship their handspikes in the training-loops, ready to give the gun the required direction in running out; and, if in a sea way, the Train-tackle man will stand ready to unchoke the luff, and ease the gun out. (At *Friction Carriages* the 2d Loader attends to the compressor.)

VIII.—RUN OUT!

196. If the gun is mounted on a truck carriage, the 1st Captain will take the port handspike with his left hand, and the 2d Captain the starboard handspike with his right hand, and place themselves in position to guide the gun in the proper direction for the object.

The 1st Loader and 1st Sponger remove the chocking quoins, which they place behind them against the side. At *Friction Carriages* the 2d Loader slacks up the compressor.

The Train-tackle men clear the train-tackle and overhaul it, or ease it off carefully as the case may require.

The 1st Loader and 1st Sponger lift the breeching, to prevent it from getting foul of the trucks. The rest of gun's crew, except the Powder-boy, man the side-tackles, standing between the fall and the guns, and unite to run out the gun,* training it properly at the same time.

When the gun is out and trained, the Handspikemen unship the handspikes from the training loops, level the gun if required, and lay them on deck as directed in the III command.

If the exercise is to be continued it will be resumed at the word "prime," but if not, the order will be given to—

---

* When working the lower deck guns, and the port-lids are lowered, the port-tackle men will man the port-tackle falls, when the order is given to "run out." The port-lid must be triced *considerably above the level* to prevent its being injured by the explosion of the charge, and the falls secured to the cleats on the beam over the gun. The motions of tricing up and lowering the portlids should never be omitted, *in exercise*, in order that the men may be accustomed to them.

Digitized by Google

IX.—SECURE THE GUN!

197. The Powder-boy returns the spare powder and the passing boxes to the magazine. The Shotmen return the shells and empty shell-boxes, if any remain on deck, to the shell-room and the spare shot to the lockers.

The 1st CAPTAIN directs the gun to be laid square in the middle of the port.

When the guns are to be secured without being housed, the 1st Loader and 1st Sponger place the chocking quoins behind the front trucks and put in the tompion. The Handspikemen free the quoin and lower the breech, the 2d Captain handling the quoin. When the gun is fitted with an elevating screw, or with a screw-quoin, this operation is performed by the 2d Captain alone, who handles the screw.

The 1st Captain assisted by the 2d Captain hauls the breeching through the jaws of the cascable to the port side of the gun, forming with the bight a turn over the breech and 1st reinforce, and securing the parts on each side with selvagees and heavers.

The 1st Loader and 1st Sponger haul up and secure the lower half-ports. The 1st Captain puts in the vent plug, lays the hammer of the lock in its place, and the lock-string in a coil around it. The 2d Captain takes the lock-apron from the Train-tackleman and secures it over the lock, and in like manner covers the breech and reinforce sights; and at Friction Carriages puts the housing chock into the slot in the rear of the gun, and raises the training trucks clear of the deck, by means of a chock under the slide.

The men at the side-tackles unhook the double blocks from the side training bolts, and hand them to the 1st Loader and 1st Sponger, who hook them to the eye-bolts at the sides of the port. The men on both sides haul them taut and stop the parts of the tackles together, with knittles provided by the Quarter Gunner, and then expend the remainder of the falls by passing them round the breech of the gun, above the jaws of the cascable, and stopping the bights alternately to the eye-bolts* on each side of the port, until expended.

* Should hook-bolts be substituted for the eye-bolts now in use for the side-tackles, as vessels are built or repaired, the turns of the fall will be taken round the hooks in securing the gun.

Digitized by Google

The Train-tacklemen hook the train-tackle to the side-tackle bolts on each side of the port, the double block on the port side, haul the tackle taut, expend the end round the breech and stop the parts in with the side-tackles.

The 1st Captain then directs the Handspikemen, or if the screw is used, the 2d Captain, to raise the breech so as to level the gun and bring all parts of the tackles and breeching taut.

The 1st Loader and 1st Sponger put in and secure the upper half-ports, if directed, and the 1st Loader swabs the deck to collect any loose powder which may have been scattered on it.

The several persons who provided the arms and implements used in the exercise, return them to their proper places, or to the persons appointed to take charge of them, care being taken that the small arms are unloaded before they are sent below, unless otherwise directed by the Captain.

HOUSING LOWER DECK GUNS.

198. The 1st Captain directs the gun to be laid square in the middle of the port and run in to a taut breeching, *and if loaded, the load to be drawn.* The 1st Loader and 1st Sponger place the housing chocks before the front trucks.

The gun is then run out upon the housing chocks, and the chocking quoins are placed behind the rear trucks.

The Handspikemen raise the breech to free the quoin; the 2d Captain withdraws it and the bed; the Handspikemen lower the breech upon the axletree, so that in case the gun should break adrift, the muzzle will take the upper port sill; and the Port-tacklemen lower the port lid.

The 2d Loader and 1st Shotman bring the port bar to the 1st Loader and 1st Sponger, who put it in place across the port, hook the port-hooks in the ring-bolts in the port lids, and drive in the keys until the port is perfectly closed.

The men on both sides shift the side-tackles from the training bolts to the side-tackle bolts, haul them taut and expend the ends between the blocks. The 1st Loader and 1st Sponger pass the frapping lashing round both parts of the breeching, in front of the brackets, and with the assistance of the men nearest them bowse it well taut; and se-

Digitized by Google

cure the muzzle by placing the grommet over it and the housing hook-bolt, and by frapping the two parts together with the lashing. When the housing bolt is an eye-bolt, a toggle will be necessary to keep the grommet in its place.

In moderate weather the train-tackle is unhooked from the deck, and made up and stopped along the side-tackle, on the forward side of the gun. In bad weather it is kept hooked, bowsed taut, and the end expended through the ring-bolt and round the arms of the rear axle.

The manner of housing guns, mounted on truck carriages, on other decks, in bad weather, does not vary materially from that just described, excepting that the upper half-ports and the *port bucklers* are put in and secured.

When there are no housing chocks the ordinary chocking quoins may be used as such. It will be an additional security to take off the rear trucks, and to tighten the muzzle lashing by raising the breech.

In housing broadside guns mounted on *Friction Carriages*, the gun is first run in and housing chock dropped into the slot in front of the gun, which is then run out hard upon the chock and the compressor tightened. The gun and implements are secured as at other guns, the training trucks being raised clear of the deck by means of a chock under the slide.

CLEARING FOR ACTION,

WORKING AND SECURING BOTH SIDES AT ONCE.

Word of Command.

"MAN BOTH SIDES."

199. Whenever, for any purpose, this order is given, *and there are full crews for the guns on one side only*, those parts of the guns' crews which belong to the starboard watch will man the starboard guns, and those parts of the guns' crews which belong to the port watch will man the port guns, the Powder-boys serving with the 1st parts of their respective guns' crews.

Digitized by Google

The half crews of each pair of guns on the same side of the deck, beginning forward, as Nos. 1 and 2; 3 and 4; 5 and 6; are to assist each other in working their guns. When the after guns have an odd number the crew will work both their own guns. The 1st and 2d Captains, Spongers and Loaders are to remain at their respective guns, the others shifting from one gun to the other, of their pair. The shifting men will, after their own gun is cleared for action, first man and work the forward gun of their pair, until it is pointed, fired, run in, and properly secured for loading: they will then repair to the other gun of their pair and perform the same duties, and so continue to shift from one to the other, that each may be fired alternately.

The Captains, Loaders and Spongers are to endeavor to load their respective guns ready for running out, whilst the shifting men are employed at the other gun. The same Powder-boy is to supply both guns.

In clearing for action, or when securing the guns, the half crews will attend to their own guns.

BOTH SIDES BEING MANNED,

TO MAN ONE SIDE ONLY;

OR, THE GUNS ON ONE SIDE BEING MANNED,

TO CHANGE SIDES.

Command.

"MAN THE STARBOARD [OR PORT] GUNS!"

200. Whenever this or any other order is given which requires all the men suddenly to leave the gun which they are working, they are not to do so, until it is properly loaded, and well secured by hauling taut the side and train-tackles, and hitching their falls around the straps of the blocks; nor on lower decks of ships of the line till the ports are down and secured by their laniards. A strict compliance with this injunction is indispensable to guard against excessive or imperfect loading and other accidents.

Digitized by Google

QUICK FIRING.

201. In order to insure the great advantage of rapid firing, when the enemy is near, and consequently when nicety of aim becomes of secondary importance, Officers are enjoined to frequently exercise the crews of the unchambered guns in setting the cartridge, shot and wad home together in one motion.

To prevent the shot from rolling on the tie of the cartridge and jamming it, the end of the cartridge-bag, outside of the tie, should be shortened as much as security will permit, unless it has previously been specially prepared for this use.

Command.

"LOAD IN ONE MOTION."

The 1st Loader receives the cartridge from the 2d Loader and puts it into the gun, in the manner described in the VII command; he also receives from the 2d Loader the shot and wad and introduces them in the same manner.

As soon as the *whole charge* has been introduced, the 1st Loader and the 1st Sponger thrust it down smartly with the rammer, by successive efforts, as in ordinary loading. When "home" the men run out the gun as quickly as possible.

The Captain of the gun pricks, primes, points and fires in the usual manner, but as rapidly as may be consistent with a good aim.

SHIFTING BREECHINGS IN ACTION.

Command.

"SPONGE, LOAD, AND SHIFT BREECHING."

202. Supposing the gun's crew to be reduced to six men and the Powder-boy, that being the least number required to perform the evolution, and the gun to be discharged and run in. The 1st Captain hauls taut the train-tackle and chokes the luff and the 1st Loader and 1st Sponger place the chocking-quoins forward of the front trucks, and proceed to sponge and load the gun in the usual manner. The

Digitized by Google

2d Sponger and 2d Loader haul taut side-tackles and choke luffs, or if rolling deep, hitch the falls round the straps of the blocks, and then unshackle the old breeching aud shackle the new, which is to be brought to the gun by the 2d Captain.

The 1st Captain removes the old breeching from, and places and secures the bight of the new one in, the jaws of the cascable. The 2d Captain passes the old breeching amidships, and the men resume their usual duties at the gun.

When there are more than six men at the gun, the 2d Sponger and 2d Loader, after securing the side-tackle falls, will assist to load the gun, and the additional men will assist in unshackling the old and shackling the new breeching.

SHIFTING TRUCKS.

203. Take out the linch pin of the truck to be shifted and lay it on the deck as a fulcrum on which to rest the hankspike; put the point of the handspike in the notch under the dumb-truck and bear down on the handle until the truck is free, then slip off the truck and put on another.

Digitized by Google

EQUIPMENTS AND IMPLEMENTS OF PIVOT TRAVERSING GUNS.

204. Each pivot gun mounted on a traversing carriage is to be always provided with the following equipments and implements:

ARTICLES.	Where they are to be carried when the gun is secured.
Carriage and slide complete with elevating paul, screw, or screw-quoin, and pivot bolts.	In place.
Eccentric and elevating levers . .	Becketted inside of brackets.
Two roller Handspikes, or four if but one gun is mounted.	With the capstan-bars between the decks.
In and out-tackles, two each . .	Hooked to carriage and slide.
Two train-ropes	Stopped along rails.
Two training tackles	Stowed on slide.
One tompion with wad and laniard.	In the muzzle of the gun.
One sponge and cap	On the carriage inside of the brackets.
One rammer	
One lock with string and vent plug complete.	In place on the gun.
One apron and strap, for lock . .	do.
One breech-sight and apron . .	do.
One reinforce-sight and apron . .	do.
One trunnion-sight.	In box, under the light deck, or in a safe place near to the gun.
Two priming-wires and one boring bitt, with beckets for the wrist.	Inside the brackets near the breech.
One fire bucket with laniard . .	At capstan or boats.
Seven round shot (for cannon.) .	In a rack on the slide.
One shell (for shell guns.) . . .	In a box on the slide.
Twenty selvagee wads	On the breast of the carriage.
One hand-swab	do. do.
Two shifting chocks	On rear transom of carriage.
One battle axe	Becketted on breast transom.
Four transporting trucks . . .	In store-room.
One " Pivot-shifting screw" . .	On the slide, under the gun.

Digitized by Google

STATIONS AND PREPARATORY DUTIES

OF THE

MEN AT GUNS MOUNTED ON TRAVERSING PIVOT CARRIAGES.

205. No. 1. 1st CAPTAIN, Pivotman, commands; sees his gun cleared and cast loose; circles cleared and swept; in and out-tackles and training-tackles or train-ropes, as may be required, hooked and moused; levers shipped; sights and locks screwed on; elevating apparatus, pivot-bolts and compressors in working order; takes off lock and breech sight aprons, and hands them to the 1st Training-tackleman, who passes them clear of the gun circle; buckles on his waist-belt, keeping the primer-box in front; beckets a priming wire to his wrist; puts on and secures his thumb-stall on his left thumb; sees that the gear and implements for the service of the gun are in place and ready for use; and that each man is properly armed and equipped.

When the gun is ready for action, he sees that the men take the positions of their respective gun numbers in the diagram "Firing," and reports to the officer of the subdivision to which he belongs.

206. No. 2. 2d CAPTAIN, Pivotman, assists in casting loose, fixes trunnion sight, takes off reinforce sight-apron and passes it clear of the gun circle, ships elevating lever, and sees paul and ratchett and rear pivot clear, and in working order.

Takes the place of the 1st Captain when the latter is absent; clears lockstring and lays it in a loose coil round the lock, convenient for use; when needed provides and uses match.

207. No. 3. 1st LOADER, Pivotman, assists 1st Sponger in taking out tompion; sees front pivot clear and in working order; provides wet hand-swab on breast of carriage and passes rammer to 2d Sponger.

208. No. 4. 2d LOADER, Front Leverman, assists in casting loose; places shot rack and shot on the deck, on the left of the slide and abreast of the breech of the gun, and sees the wads in place on the breast of the carriage; ships left front lever and sees that the eccentrics and trucks are in working order; provides and uses shifting chock. [*When the gun's crew consists of but* 12 *men, he also sweeps the gun circle and tends single block of training-tackle.*]

Digitized by Google

209. No. 5. 1st SPONGER, Pivotman, takes out tompion and passes it clear of the gun circle; tends front pivot.

210. No. 6. 2d SPONGER, Front Leverman, assists in casting loose; takes off sponge cap, passes it clear of the gun circle, and places the sponge and rammer, which last he receives from the 1st Loader, on the deck to the right of the slide, with the heads to the rear; ships right front lever and sees that the eccentrics and trucks are in working order; provides and uses shifting chock. [*When the gun's crew consists of but* 12 *men, he also sweeps the gun circle and tends the single block of training-tackle.*]

211. Nos. 7 and 8. 1st and 2d SHOTMEN, provide swords and pistols for their respective parts of guns' crew, and shot, shells, and wads as needed. [*When the gun's crew consists of but* 12 *or* 14 *men, the Shotmen act also as Training-tacklemen.*]

212. Nos. 9 and 10. 1st and 2d COMPRESSOR MEN, assist in casting loose; see in and out tackles hooked and moused and their falls clear and led out; and see compressors clear and in working order.

213. No. 11. 1st ROLLER HANDSPIKEMAN, clears and sweeps gun circle, hooks single block of training-tackle and places fire-bucket near the gun circle. [*When the gun's crew consists of but* 12 *men, he changes his title and duties to those of* 1st Rear Leverman.]

214. No. 12. 2d ROLLER HANDSPIKEMAN, Pumpman, clears and sweeps gun circle and hooks single block of training-tackle. [*When the gun's crew consists of but* 12 *men, he changes his title and duties to those of* 2d Rear Leverman.]

215. Nos. 13 and 14. 1st and 2d REAR LEVERMEN, assist in casting loose; ship rear levers and see that the eccentrics and trucks are in working order; assist quarter gunner in bringing up spare articles; and provide roller handspikes when needed.

216. Nos. 15 and 16. 1st and 2d TRAINING-TACKLEMEN, assist in casting loose; sweep gun circle; hook and shift double block of training-tackle, and lead out fall or train rope.

217. POWDER-BOY, repairs to the proper hatchway for his passing box and cartridge, which having received, he returns to his station a little in rear and to the left of the slide, keeping the passing box under his left arm and the cover closely pressed down with his right hand.

As soon as the foregoing duties are performed, the men stationed at pivot guns will assist the Carpenter's crew in taking down the moveable bulwark, and in like manner in putting it up after the gun is secured.

Digitized by Google

EXERCISE FOR HEAVY GUNS

MOUNTED ON

TRAVERSING PIVOT CARRIAGES.

218. The guns are supposed to be pivotted over one of their fighting centres, to be loaded, cast loose, run out, and if necessary compressed; all the preparatory arrangements completed, and the men in the positions of their respective gun numbers in the diagram "*Firing*." The exercise will then proceed in conformity to the following words of command and directions for their execution.

I.—SILENCE!

219. At this preparatory order the strictest silence is to be observed.

The Captain of each gun, standing upon the rear of the slide, will face towards the gun; the men will look towards him and attentively wait for orders.

II.—PRIME! (See notes.)

220. The Captain of the gun lays back the hammer, and with the priming-wire in his right hand clears the vent, feels that the cartridge is home and pricks it. Then with his right hand he takes a primer from the box, shutting it immediately with his left hand; he puts the primer into the vent, pressing the wafer flat on the lock-piece with his thumb.

III.—POINT TO THE OBJECT! (See notes.)

221. At this command, the men take the positions of their respective gun numbers in the diagram "*Pointing*." The 1st and 2d Captains being on the slide in rear of the gun, ready to make the necessary

Digitized by Google

alterations in the elevation, and to direct the training; the other men, on their respective sides man the training ropes (or tackles,) except the Rear Levermen, who with their levers, bring the training trucks into action, and release them again when the training is completed.

The Captain of the gun adjusts the elevation by the breech-sight, or by the trunnion-sight for greater elevations than can be given by the breech-sight, according to the charge with which he knows the gun to be loaded, and to the distance directed by the officer commanding the division; and taking the lock-string in his right hand and stepping back clear of the recoil, with his right foot well advanced and flat upon the slide, his right knee bent and his body inclined towards the gun, brings his eye in range with the sights. He will then direct the men at the training ropes (or tackles,) to train the gun until the sights are in a line with the object, giving the word "*Starboard*" when the starboard, and "*Port*" when the port tackle is to be bowsed upon. When the gun is trained on the object he will signify it by the word "*well.*" The Compressor men will see the "in" and "out" tackle falls clear, and the former manned.

Should it be necessary to alter the elevation, and the gun be fitted with a *paul and ratchett*, the 1st Captain attends the paul and the 2d Captain uses the elevating lever and screw quoin. Each notch of the ratchett is equal to 2½ degrees or its equivalent distance, and the screw quoin, under the heel of the paul, gives the intermediate degrees or distances.

The Captain of the gun gives the order "*raise*" or "*lower*" the breech. In nice practice, it will be better to raise the breech a little too high and then lower it by the screw quoin to the exact point. When the proper elevation is given, the 1st Captain gives the word "*well,*" and the 2d Captain unships the elevating bar and lays it on the slide between the rails.

The Captain of the gun, retaining his position for aiming, directs further alterations which may be necessary, and keeping the lock-string taut and his eye in range with the sights, waits until the line of sight is on with or in proper position for striking the object, when he gives the word—

Digitized by Google

IV.—"READY—FIRE!" (See notes.)

222. At the word "*Ready*," the men take the position of their respective gun numbers in the diagram "*Firing*."

The side-tackle men haul taut the "in-tackle" falls—the 1st *Captain tightens the lockstring*. At the word "*Fire*," the 1st Captain pulls the lockstring with a *strong pull*, bringing his right foot back to the left and his body erect, clear of the recoil of the gun. The side-tackle men haul through the slack of the in-tackle falls as the gun recoils. Should the gun not recoil sufficiently for loading, the 1st Captain gives the order "*Run in*," when the Compressor men slack the compressors, and the Levermen ship the levers and bring the rollers into action, and the Side-tackle men run the gun in. The Levermen then again throw the rollers out of gear, but do not yet unship the levers. Should the rolling of the vessel be heavy, it may be necessary again to tighten the compressors.

If the gun has been much elevated, the 2d Captain ships the elevating bar and levels it for loading.

N. B.—If from *any cause* the firing should be delayed after pointing, the gun should be carefully pointed again before the order to fire is given.

V.—"SPONGE!"

223. At this command the gun's crew take the position of their respective gun numbers in the diagram "*Loading*."

The Captain of the gun steps up to the breech, lays back the hammer, places the lockstring over it in a loose coil, and clears the vent and stops it closely with his thumbstall. The 1st Sponger and 1st Loader place themselves by the muzzle, on their respective sides. The 2d Sponger standing close to and facing from the gun, takes up the sponge with both hands and passes it to the 1st Sponger, who receives it with the back of his right hand and the palm of his left hand downwards, puts it into the muzzle of the gun and shoves it well down the bore. The Sponger, then, resting his left hand and the Loader his right hand on the muzzle of the gun, with their other hands push the sponge home, and turn it *from* the Sponger two or three times,

Digitized by Google

Firing.

Loading

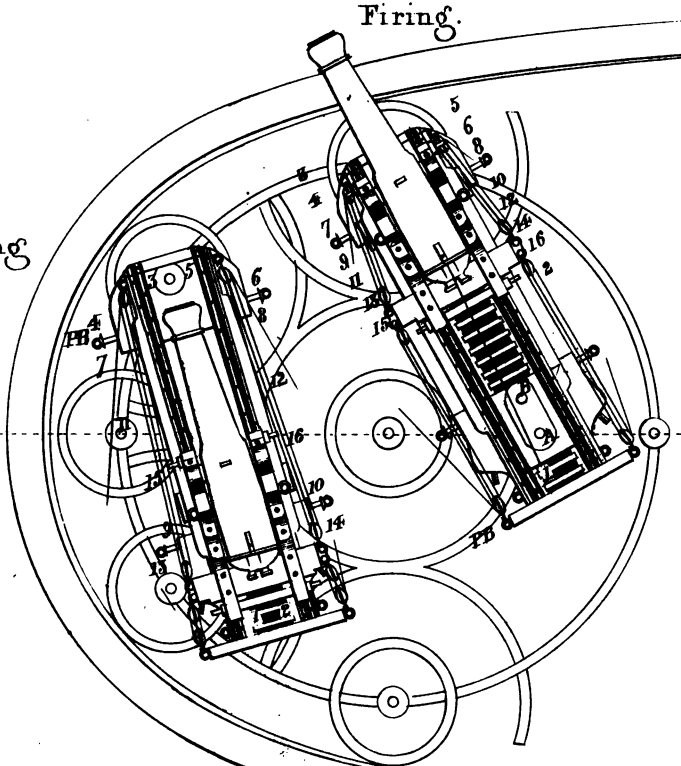

Stations of 16 Men, & a Powder Boy, at an 8 Inch Pivot Gun. of 10 5 Cwt.

Scale $\frac{1}{8}$ of Inch = 1 Foot.

A. Shifting Centre of Bow Gun.
B. " " of Stern Gun.

C.K. Stellwagen. delt. & Lith. Wash.n DC.

Digitized by Google

Digitized by Google

that the worm may free the bottom of the bore from the remnants of the cartridge bags which frequently adhere.

They then draw out the sponge, and the 1st Sponger strikes the staff, near the head, against the swell of the muzzle, to shake off any adhering substance. Should any burning fragments be drawn out, the 1st Loader extinguishes them with the wet swab and the operation of sponging is repeated. Then the 1st Sponger returns the sponge to the 2d Sponger, who hands him the rammer and lays the sponge on deck. The officer of the division will direct the Sponger to use the wire sponge occasionally.

The 2d Rear Leverman examines and clears the sponge-head and worm. After sponging the 1st Captain will again try the vent.

If at any time he should be unable to clear it with the wire, he will use the boring bitt* or vent punch; and if these should fail, he will have recourse to the vent-drill and bow in charge of the quarter gunner.

In every case of this kind, after the obstruction has been pushed down into the bore, it should be removed by the wire sponge before loading.

VI.—"LOAD WITH CARTRIDGE!"

224. The 1st Captain stops the vent, the Powder-boy moves up to the 2d Loader with the box under his left arm and his right hand on the lid, which he removes as he presents the box. The 2d Loader, facing from the gun, takes the cartridge from the box and passes it to the 1st Loader, who remains facing the gun and puts the cartridge into the bore with the seams sideways and tie outward, and shoves it well down with his left hand.

The Powder-boy repairs immediately to the proper hatchway in the deck on which he serves for another cartridge, passing on the side not engaged, carrying his box uncovered with the mouth downwards and striking it over a division tub that any combustible matter may be dislodged before another cartridge is put in.

The Sponger enters the rammer in the same manner as he did the sponge, holding it with the right hand under and the left hand over.

* The boring bitt should be used with great care, as being of steel, it is liable to be broken off in the vent and thus to spike the gun.

Digitized by Google

He then rests his left hand and the Loader his right hand on the muzzle of the gun, and with their other hands shove the cartridge *home;* give it two smart blows, and letting go the rammer and falling back clear of the muzzle wait for further orders.

The Captain of the gun unstops the vent and pricks the cartridge, if it be home; but if not, withdraws the wire and gives the word "*ram home,*" when the Loader and Sponger resume their positions and repeat the operation of ramming, until the cartridge is home. At the word "home," the rammer is withdrawn.

VII.—"LOAD WITH SHOT OR SHELL!" (See notes.)

225. The 2d Loader passes a shot and selvagee wad to the 1st Loader, who puts them into the bore of the gun, the wad last, and shoves them well down with his left hand.

The 1st Sponger enters the rammer, and assisted by the 1st Loader, shoves the shot and wad down and rams them home as before, giving them when down, two smart blows with the rammer, for the purpose of setting the wad into its place. The 1st Sponger returns the rammer to the 2d Sponger, who lays it on deck by the side of the sponge.

When loading with a shell, the length of the fuze having been designated by the officer of the division, the 2d Loader takes the shell out of the box and passes it to the 1st Loader, who enters it fairly into the bore, sabot first and fuze up, and *keeps* his hand on it to prevent its falling out. When *very heavy* shells are used, however, it may be necessary or advisable for the 1st Shotman to assist the 2d Loader to bring the shell in its box and place it under the muzzle of the gun, and for the 1st Loader and Sponger to unite in lifting and placing it in the gun. The 2d Loader covers the box again and passes to the Shotman, who, on his return for another shell, passes the empty box below. The 1st Sponger strips the leaden patch off from the fuze, and passes it to the 1st Captain, as an evidence that the priming has been exposed.

The 1st Sponger then examines the priming, and assisted by the Loader, as before, *pushes* the shell home firmly and carefully, without either ramming, which might injure the priming of the fuze, or turning

NOTE.—Particular attention should be paid to the directions given for sponging the gun and ramming home the cartridge, which have in view the safety of the men, and the risk of spiking the gun by bending the priming wire.

Digitized by Google

Digitized by Google

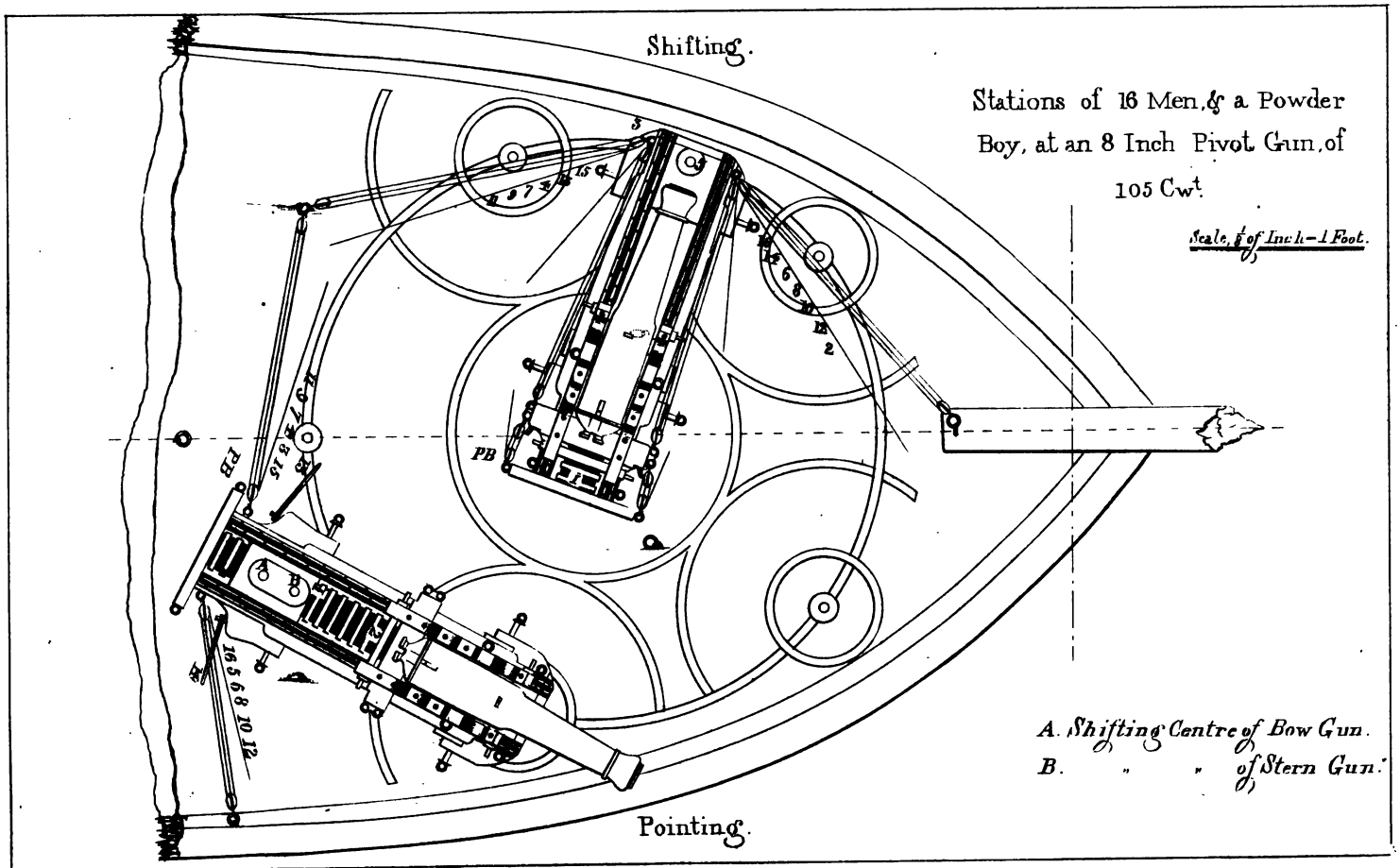

Digitized by Google

the rammer, which might alter the position of the fuze in the bore. No wad is to be used over the shell, except when the ship rolls so heavily as to render it necessary, in which case a selvagee wad is to be used.

VIII.—"RUN OUT!"

226. At this command the Compressor men slack the compressors and overhaul the inner side-tackles, and the Levermen bring the rollers into action.

All the other men on each side, except the Captains, man the out-tackles and run the gun out.

As soon as the gun is out the Levermen throw the trucks out of gear and unship the levers, the Compressor men tighten the compressors if necessary, and see the out-tackle falls clear for running. If the exercise is to be continued it will be resumed at the word "*Prime!*"

When necessary the order will be given to—

IX.—"SHIFT PIVOTS," (to the bow, beam, quarter, or stern.)

227. The new position will be designated by the officer in charge of the gun. The gun must be first run out, if not already in that position. The men then assume the positions of their respective gun numbers in the diagram "*Pointing*," except the 2d Captain, who attends rear pivot, and the 2d Loader, or the 2d Sponger, who places the shifting chock on that side of the gun towards which it is to be trained. The gun is then trained over the shifting centre, the rear pivot adjusted, and the training trucks thrown out of gear. The gun is then run in, and the men take the positions of their respective gun numbers in the diagram "*Shifting*."

The Training-tacklemen hook the double blocks of their tackles to the breast of the slide and lead out the falls; the single blocks being hooked and shifted by Nos. 11 and 12, or their substitutes.

The shifting chock is placed by the 2d Loader or 2d Sponger, and the 1st Loader and 1st Sponger attend the forward pivot. The rest of the crew, on their respective sides, man the falls, except the Captain of the gun, who gives the word "starboard," or "port," according

Digitized by Google

as the starboard or port tackle is to be bowsed upon. If necessary the roller handspikes, working in the eye-bolts in the forward transom of the slide, will be used by the Roller Handspikemen.

As soon as the gun is pivotted* in its new position it will be run out, the rear pivot released, and the shifting chock lifted. Arrangements are made for shifting the broadside guns both to the bow and stern, in aid of the pivot guns, when the distance of the enemy is not too great. When the stern gun is pivotted over the rudder, one of the broadside guns may be worked on each side of it, in firing right aft. Guns mounted on traversing pivot carriages may be fought upon the rear pivot, on the common or shifting centre, and fired from any point of the traversing or shifting circle, if the elevation be such as will not endanger the decks. In this case the training must be done with the gun run in over the rear pivot; as after it is run out the training will be difficult, and the helm must be relied on to bring the gun on with the object.

If the exercise is not to be continued the order will be given to—

X.—"SECURE THE GUN!"

228. The Powder-boy returns the spare powder to the magazine, and the Shotmen the shells and empty boxes, if any remain on deck, to the shell-room, and the spare shot to the shot lockers.

The gun will be brought into the position for housing, and both pivot-bolts, where they are not fixed, after being wiped off and re-coated with lacker, dropped into their respective sockets; the gun being secured over that one which is furthest from the extremity of the vessel.

The compressors will be tightened, wiped off and re-lackered,† and the chocking quoins will be used to steady the slide. The 1st Loader,

* As the pivot-bolts when not fixed, must necessarily have some play in their sockets, they are slightly tapered in the socket, and "pivot shifting screws" and eye-bolts provided, by means of which, and the roller handspikes, the slide may be moved until the pivot holes coincide.

† The "lacker for small arms" should be used upon the bright parts of the iron work of these carriages. The coating should be thin, and should be renewed as often as necessary to prevent rust; as a further precaution against which, each gun is to be provided with an ample tarpaulin cover, which, however, is only to be used in bad or wet weather.

Digitized by Google

or the 1st Sponger, puts in the tompion. The 2d Sponger puts on the sponge cap and secures the sponge in its place, on his side of the carriage, and hands the rammer to the 2d Loader who secures it in a similar manner on the other side of the carriage.

The 1st Captain puts in the vent plug, wipes off and lays the hammer of the lock in its place, and the lock-string in a loose coil round it, receives the lock and breech-sight aprons from the 1st Train-tackleman, secures them in their places, and assisted by the 2d Captain, levels the gun.

The 2d Captain puts the apron on the reinforce sight, and takes off and returns to its place the trunnion sight. He then wipes off and relackers the elevating lever, the screw quoin and the pawl, and secures the lever in its beckets, inside of the brackets.

The Levermen, after seeing that all the trucks are thrown out of gear, and wiping off and relackering the working parts of the eccentrics, trucks and levers, becket the latter in their places, inside of the brackets. The Shotmen haul taut and secure the "out" tackles, and Nos. 11 and 12 or their substitutes, the "in" tackles on their respective sides of the gun, and expend and stop the falls between the blocks.

They then assist the Training-tacklemen in making up and securing the training-tackles, which are stowed on the slide, in good weather, and in bad weather hooked across the deck to steady the carriage. The train ropes are stopped along the outside of the rails of the slide, by the Rear Leverman.

In heavy weather, for the further security of these guns when housed fore and aft, gripes will be passed round each gun and secured to the bolts in the spirketting.

The several persons who provided the arms and implements used in the exercise, return them to their proper places, or to the persons appointed to take charge of them.

TRANSPORTING PIVOT GUNS FROM ONE END OF A VESSEL TO THE OTHER.

229. The gun is to be pivotted and trained so as to bring its muzzle towards the direction in which it is to be transported, the transporting trucks are to be shipped and secured to their axles, the chock-

Digitized by Google

Adm de Brea
Adm de

ing quoins placed, the training trucks thrown out of action, the compressors brought to bear to confine the gun near the centre of the carriage, some of the tackles hooked for dragging the gun, and others, with roller handspikes or capstan bars, for guiding and steadying it. The pivot-bolts, or the flaps, are to be removed, and the gun's crew, aided by others if required, are then to transport it to the desired position at the other end of the vessel. The carriage is then brought over and pivotted upon a fighting or outer centre, the transporting trucks removed and the training trucks brought into action. The implements for working and loading the gun are to be brought to it, and it will then be ready for action.

When the forward and after carriages are of different lengths, and the traversing circles of different diameters, the longest carriage will be fitted with an additional rear pivot-hole and friction plate, to correspond with the smaller circle, that the carriage may be worked from the midship pivot-bolt and shifted to the different fighting centres or pivot-bolts of the smaller circle.

Thus, when only one pivot gun is mounted forward and one aft, and when they can both be brought to bear from either end of the vessel, the force may be doubled at that extremity, by pivotting one gun on each bow or quarter, as the case may be.

Digitized by Google

BOARDERS.

230. It is not supposed that any directions can be framed in such a way as entirely to provide for all the various circumstances which may require attention when about to board an enemy or to repel a similar assault made by an enemy upon our own vessels.

The following general suggestions are however presented for the consideration of Captains, in order that some degree of uniformity may be preserved when other more important considerations do not prevent it.

231. Upon the call for "Boarders," the divisions which may be called, should form on the gangway of the side which is not engaged, properly armed, and remain there till ordered elsewhere.

PREPARE TO BOARD!

(FROM THE STARBOARD BOW OR ANY OTHER SPECIFIED PLACE.)

232. The Boarders should repair to the place directed, taking care to keep themselves down so as not to be seen by the enemy, and form close to the bulwarks until the order is given to—

BOARD THE ENEMY!

233. The Boarders should then gain the enemy's deck as quickly as possible, keeping near enough to each other for mutual support, and to act in concert against the opposing force, using every possible exertion to clear the enemy's decks, by disabling or driving the men below.

In case the intention of boarding should be discovered by the enemy, and he should collect his men to repel the attack, the marines and small-arm men should take positions where they can best fire upon the men thus collected, and if possible the spar-deck guns loaded with grape should be used for the same purpose, before the Boarders are ordered to make the attack.

So long as the contest is continued after boarding, the fire should be kept up against the enemy from all the guns excepting those of the spar-deck, with as much vigor as the number of men remaining at the guns will allow.

Digitized by Google

The guns should be much depressed at such time that there may be little or no danger to our own men. Much positive injury may be inflicted on the enemy in this way, besides the advantages of dividing his attention at such an important moment.

If it should be necessary to repel Boarders from the enemy, the Boarders and Pikemen should be called, and at the order—

"PREPARE TO REPEL BOARDERS,"

(AT ANY SPECIFIED PART OF THE SHIP.)

234. The Pikemen should arrange themselves in front of those armed with swords, and in situations which will allow them to rest the points of their pikes on the hammocks or rail, and cover that part of the ship, and the parts where the assault is expected. The marines with their muskets loaded and bayonets fixed, may be formed behind the Pikemen, or at any other place from which their fire on an assailing enemy may be most effective, and least dangerous to our own men.

235. The moment an enemy commences his assault the order—

REPEL BOARDERS!

Should be given, and every effort made to prevent his gaining or retaining any foothold in the ship.

It will of course be important to bring grape and musketry to bear at once upon the enemy's men when they are assembled for boarding, if they should be discovered in time.

The men left at the guns should be watchful that the enemy does not gain an entrance through ports or quarter galleries.

In case the enemy should effect a landing on the decks, the pikes may, from their length and the press of the contending parties, become less efficient than the swords. Whenever this occurs the sword should be brought into full use, as the most efficient weapon for attack or defence at such close quarters.

The men, and especially the Boarders and Pikemen, should be exercised and encouraged to practice in the use of the single stick and of the sword as far as circumstances will allow.

Digitized by Google

NOTES UPON THE MANUAL EXERCISE.

SECOND COMMAND.

PRIME!

236. It is essential that the wafer of the primer should be placed flat and close upon the lock-piece, in order that the hammer may strike it fairly.

The tubes of all primers are carefully gauged before issuing them for service, but such as, from any cause, become so much enlarged as not to go easily in the vent, should be rejected without attempting to force them down.

It will occasionally happen, either from carelessness, or inattention to the instructions given for the proper manner of pulling the lock-string, that the wafer of the primer will be crushed without exploding it. Frequently, a second and stronger pull will have the desired effect, if the fulminate has not been dispersed; in case however, this attempt should prove unsuccessful, the tube of the primer should be drawn out, if possible, before using the priming-wire to clear the vent.

In case either lock or primer should entirely fail, recourse will be had to the *spur-tubes*. In using these, the Captain of the gun after taking the tube from the box, pulls the cap off the spur to expose the quick-match, which he turns towards the muzzle of the gun, so that in firing the fibrous end will be in a convenient position to be touched by the match.

In the improbable event of all the foregoing means failing, a sufficient quantity of quill-tubes, such as were used formerly with the flint-lock, can be easily made on board ship for the emergency.

The old method of priming with powder by filling the vent and laying a train upon the lock-piece, is incompatible with the reduced diameter of the cartridges now in use, which leave a vacancy in the chamber that would require to be filled, before any powder would lodge in the vent.

Digitized by Google

The men should be practised at unloaded guns, in placing the primers properly and in pulling the lock-string so as to ensure their explosion, until this very essential knowledge and skill has been perfectly attained.

In case it should be necessary to use the *match*, the 2d Captain takes the match staff in his right hand at the command, "point to the object," and places himself abreast the rear or inner truck, faces inboard; stoops and blows off the ashes from the lighted match, and extends his arm ready to touch the end of the spur-tube at the moment the Captain gives the word "fire."

THIRD COMMAND.

POINT TO THE OBJECT!

237. To facilitate the operations of pointing guns according to the distance of the object aimed at, sights are prepared and fitted to each gun.

The ordinary sights which are now fitted consist of two pieces of bronze gun-metal, one of which, called the "*reinforce sight*," is a fixed point, firmly secured to the sight-mass, upon the upper surface of the gun, between the trunnions.

The other or "breech-sight" is a square bar or stem, with a "head" in which is a "sight-notch." This bar or stem is made to slide in a vertical plane in the "*sight-box*" fixed to the breech-sight mass, and is held at the various elevations for which it is graduated by means of a screw.

The bar or stem of the sight has lines across its faces denoting degrees of elevation, each of which is marked with the number of yards at which a shot or shell will strike the point aimed at, when that line is brought to a level with the top of the sight-box, and the gun is loaded with a specified charge of powder.

The uppermost line on the stem marked "*level*" is the zero of the other graduations, and when adjusted to the level of the top of the sight-box, the bottom of the breech-sight notch and the apex of the reinforce sight give the "dispart" of the gun. When the line of sight coincides with these points, it is parallel to the bore, and when continued to a distant horizon the gun is laid "level" or horizontal.

Digitized by Google

When it can be conveniently done hereafter, sights will be made so that the "level" line on the stem, will correspond with the bottom of the head where it rests on the "sight-box," and secure a dispart-sight in case of accident to the screw in the sight-box.

For shot guns the ranges in yards for one shot and the "*distant firing*" charge of powder is marked for each degree of elevation on the *inboard* face of the sight bar. Those for the "*ordinary firing*" charge are marked on the *starboard* face and those for the "*near firing*" charge on the *port* face of the sight-bar. For shot guns the ranges of a *shell* when fired with the "near firing" charge is marked on the *outboard* face of the bar.

For shell guns the ranges are marked for shells on the sight-bars in the same manner as those for shot from shot guns.

These sights being adjusted to each gun separately and marked with its class and number, do not admit of being transferred to other guns without readjustment.

When used, the stem of the breech-sight must be raised or lowered to correspond with the ascertained or estimated distance in yards, of the object aimed at, and firmly secured there by the thumb-screw which is placed in the sight-box for that purpose. Then, if the ship is steady, elevate or depress the gun by the quoin or screw until the line of sight from the bottom of the notch of the breech-sight, the top of the reinforce-sight and the point to be struck will coincide; but, if the ship has a rolling motion, the gun must be laid by the quoin or screw, after the sight is set for the distance, so that this coincidence may be obtained if possible, by every roll which the ship makes.

The inclination of the line of metal to the axis of the bore varies in guns of the same class, as well as in different classes of guns, some muzzles being made with a swell and others straight. Aiming, therefore, by the line of metal cannot be relied on for definite ranges; besides, within those ranges it is apt to mislead by giving too much elevation to the piece. Therefore, when the established sights are not furnished, or have become unserviceable, *wooden* dispart-sights on the reinforce should be immediately substituted.

Half the difference between the diameters of the gun at the base-ring and swell of the muzzle, or at any intermediate point on the line of metal to which it is intended to extend the dispart-sight, will give its proper height at the point where the least diameter was taken, to

Digitized by Google

which should be added the height of the lock-piece above the base-ring, in order to give a line of sight parallel to the axis of the bore.

All the new guns are marked on the top of the lock-piece, the reinforce sight-mass, and the swell of the muzzle, by notches which indicate a vertical plane passing through the centre of the bore, at right angles to the axis of the trunnions.

A narrow groove in the upper surface of the wooden sight, made to coincide with the plane of the line-sights marked on the gun, will assist the Captain in getting the true direction quickly.

Pivot guns will be supplied with trunnion-sights, which are designed to be used when the ordinary sights will not give the required elevation.

In case the ordinary sights should be lost or rendered useless, *tangent-firing* may be resorted to against ships by pointing with the dispart-sight at such parts of the ship as the prepared tables indicate for the distance, and for the class of gun in use at the time.

A table of this kind is appended, which has been calculated for the 8-inch and some of the heaviest of the 32-pounder guns, when loaded with single shot and distant-firing charges.

In the absence of all better means for regulating the elevation, resort must be had to trial with the guns, and changing their elevation till a correct range is obtained.

Various modes have been practised to ascertain the *distance* from the object aimed at, when at sea, by which to regulate the elevation of guns, but none can be depended upon for giving it with minute accuracy.

The different classes of sailing ships of war, whether of the same or of different nations, are not of the same length, nor are their masts of the same height from the deck, or from the water. They, however, correspond so nearly, for the same class of ships of the same nation, that calculations made from the angles subtended by the average height of their masts, will generally give their distance with sufficient accuracy for general firing.

Tables are inserted at the end of the book, in which the distances corresponding to different angles made by the masts of English and French ships of war are shown—from which the intermediate distances due to other angles may be estimated and the sights regulated accordingly, if circumstances should render it desirable.

Digitized by Google

Officers of divisions and Captains of guns should be occasionally practised in measuring the distances of objects by the eye, at times when opportunities offer of verifying the accuracy of their estimate by comparing it with the distance obtained by the foregoing methods, or any other which will afford the best means of comparison.

When the object is so near as to require very little or no elevation, the use of the dispart-sight is to be preferred, and the gun may be pointed directly at the point which it is desired to hit. If from any cause the *hull* of an enemy's vessel at such times cannot be seen, but only its *direction* be known, advantage may be taken of the flashes of the enemy's guns to determine when the guns are level, in case the ship has a heel or a rolling motion.

When from darkness, smoke or other cause, the horizon or the hull of an enemy's ship cannot be seen, the actual elevation at which the guns are fired is rendered very uncertain from the want of some convenient means of ascertaining the moment when the guns are "level." Pendulums and other means have been tried but hitherto without much success. The attention of Officers is invited to the subject, that if practicable, some simple and efficient instrument may be devised for this purpose, and which will be little liable to get out of order.

The ordinary beds and quoins are arranged to allow the extreme elevation and depression of the guns which the ports will admit with safety. When the inner or thick end of the quoin is fair with the end of the bed in place, the gun is level in the carriage, or horizontal, when the ship is upright. The degrees of elevation which may be given to the gun by drawing out the quoin when laid on its flat, are marked on the side or edge of the quoin, and those of depression on the flat of it. When the quoin is entirely removed and the breech of the gun rests on the bed, the gun has its greatest safe elevation, and when the quoin is pushed home on its side, the gun has the greatest safe depression that the port will admit.

Care must be taken that the stop on the quoin is always lodged in one of the notches in the bed, to prevent the quoin from flying out, or changing its position.

Ward's *screw*-quoin is so arranged that all the safe *elevations* of which the port admits are given by it, without removing it from the

Digitized by Google

bed, which would expose the female screw to injury; the depressions are given partly by the quoin and partly by an additional quoin laid on the upper surface of the screw-quoin and connected with it by means of a stop.

When the *elevating screw* is used, a quoin should be at hand to place under the breech of the gun, when properly elevated, to relieve the screw from the shock of the discharge, and prevent a change of the elevation, as well as to take the place of the screw, if it should be disabled.

If a greater elevation for broadside guns should be desired for any special purpose, it may be obtained by placing inclined planes behind the rear trucks for them to recoil over, and produce a corresponding depression of the muzzle of the gun as it comes within the port.

Additional depression may also be obtained by placing inclined planes for the front trucks to recoil upon, or by raising the breech by means of a wooden toggle placed vertically under it. One end of a tripping line, is fastened to the middle of the toggle, and the other to the breeching bolt in the side of the ship; by this arrangement the toggle is tripped from its place at the commencement of the recoil, and the muzzle is raised so as to clear the port sill by the preponderance of the breech.

"*Brings his eye in range with the bottom of the notch,*" *etc.*— Officers of divisions, while instructing the men in aiming, should be particular in impressing upon their minds the necessity of bringing the eye to an exact level with the *bottom* of the notch, as otherwise they will fire too high.

"*To train the gun until the sights are in a line, etc.*"

In lateral training, when the direction of the gun is frequently changing by the coming up or falling off of the ship; or when the position of the object to be fired at is rapidly changing by passing in opposite directions or from other causes, it may be better to train nearly to the direction, so that the causes which are in operation will soon bring the object in line, and then watch the proper moment for firing, instead of endeavoring to train at once directly upon the object.

It should be borne in mind that the lateral training, when considerable, should always precede the elevation.

Digitized by Google

FOURTH COMMAND.

READY—FIRE!

238. Circumstances will vary materially the exact moment which should be chosen for firing at sea; but when these circumstances are favorable, the following general principles should be kept in view.

When the ship is steady, the gun should be fired when the line of sight is brought upon the object; but when the ship has much rolling motion, the moment for firing should be chosen so that the shot will probably leave the gun when the roll brings the line of sight upon the object aimed at.

When it is practicable, and will not cause too much loss of time, it will be best to fire when the vessel is on the top of a wave and just begins to roll towards the object. If the loss of time should be found objectionable, the gun may be fired at any other time, when properly pointed, giving a preference, however, to a time when rolling *towards*—rather than when rolling from an enemy, and making due allowance for the probable change of elevation by the roll of the ship, before the shot leaves the gun.

The great object is to fire *low enough* to strike the hull, if the shot preserves the *intended* direction, and as a general rule to strike it near the *water-line*.

To avoid loss of shot from lateral deviations, it is a good *general rule* to direct all the guns to be pointed to strike somewhere between the fore and mizen masts of an enemy; when quite near, the guns of the forward divisions should be pointed in preference to that part of the hull about the foremast, and one or two of the after guns at the rudder, if it should be fairly exposed.

When the guns are laid for the projectile to strike the object aimed at without grazing between the gun and the object, the firing is said to be *direct*. When they are so laid that the projectile makes one or more grazes between the gun and the object, and continues its flight, the firing is denominated *ricochet*.

Direct firing is to be preferred when the object fired at is so near that the chances of hitting it are very great, and also when the intervening surface between the gun and object is so rough or irregular that a projectile striking it would have its velocity much diminished or destroyed, and its direction injuriously affected.

Digitized by Google

Ricochet firing, upon a smooth surface within certain distances, has some important advantages over direct firing. When the guns have very little or no elevation, and are near the water as they are in a ship's battery, the projectile strikes the water at a very small angle, its flight is very little retarded by the graze, and it rises but little above the surface in its course.

Direct firing requires a good knowledge of distance and the precision of both elevation and direction necessary to strike an object which is comparatively a point.

Ricochet firing at low elevations requires only correct direction, since the projectile would rarely pass *over* and would probably strike a vessel if within its effective range, whether the actual distance had been correctly ascertained or not.

The deviation of projectiles is, however, generally increased by ricochet, and in proportion to the roughness of the surface of the water. Even a slight ripple will make a perceptible difference not only in direction, but in range and penetration, and the height to which the projectile will rise in its bounds.

Although these facts demand attention, yet when the estimated distance does not require an elevation of more than three degrees, projectiles from guns pointed rather too low for direct firing, would probably ricochet and strike the object with effect even when the water was considerably rough.

When the water is not smooth the most favorable circumstances for ricochet firing are when the flight of the shot is with the roll of the sea, and the sea is long and regular.

Upon smooth water, a shot fired horizontally from the 32 pr. of 33 cwt. with 4½ lbs. powder ricochetted, and rolled, about 3,000 yards; the greatest range obtained from an elevation of 5° with the same gun and charge was less than 1,800 yards.

Shot rarely ricochet at all, with elevations above 5°, and the bounds are always higher with equal charges from the same gun, as the elevation of the gun is increased.

Concentration of fire may be desirable under certain circumstances; and arrangements have been sometimes made to secure it by the simultaneous discharge of a number of guns upon some part of an object whose distance is known.

Digitized by Google

The advantages of these arrangements are not very obvious, excepting in cases where the position of the enemy may be visible from one part of a ship, and not from all the guns in the batteries. Even in these cases however it requires that all the guns, which are to fire in this manner, should be regulated by one gun, and all be fired at the same time, which it would be difficult to accomplish; and, if successful, such a discharge from many heavy guns may be considered objectionable.

Concentration of fire upon a particular part of an enemy's vessel may be obtained by a general order for the guns to be aimed to strike that part, leaving the Captains of the guns to determine the proper time for firing, according to the circumstances at the moment. This obviates the objections due to simultaneous firing and would generally be equally effective. In this as in all other cases at sea, success would depend mainly upon the skill, judgment and coolness of the Captains of the guns.

SEVENTH COMMAND.

LOAD WITH SHOT OR SHELL!

239. No gun is to be loaded with more than a single shot or shell, without the express sanction of the Captain. Solid shot are not to be fired from shell guns.

Although double shotting may be attended with advantages when in very close action, it should not be permitted with guns which have been weakened by any extraordinary service, nor in others without due consideration of the extra strain upon the guns and their equipments, and a comparison of its probable advantages over rapid firing with single shot by simultaneous loading.

Experiments have shown that two solid or hollow round shot, when fired from 32 pdr. shot guns of 46 cwt. and upwards, will generally range sufficiently near together, and have sufficient penetrating power to produce destructive effect upon the broadside of a ship when not more than 400 yards distance. Beyond that distance, the divergence of shot is so great, that even when they retain sufficient penetrating power, their use becomes improper. From 32 pdr. guns of less that 46 cwt. the use of two shot against ships should be limited to distances not exceeding 250 yards.

Digitized by Google

The objections to the use of two shot in shot guns, apply with equal or greater force to the use of two shells in shell guns, with the addition of the danger of breaking one or both shells, and injuring their fuzes by the concussion of the discharge.

The enemy must be very near and the circumstances very peculiar to justify the use of two shells at the same time and then only with the "near firing" charge of powder.

In loading with a shell, the most exact attention is required to all the precautions relating to the position of the fuze and the mode of setting home the shell. The 1st Sponger is to be specially instructed, that, unless the leaden patch is stripped off to expose the priming, the fuze will not ignite, and consequently, the shell cannot explode; he is also to be cautioned not to touch the priming of the fuze with his fingers, for fear of injuring it by moisture. The Captain of the gun should be instructed to preserve the leaden patches he receives from the Sponger, and to account for them to the officer of the division at the end of the exercise.

Grape shot have not sufficient penetration to be used with effect, generally, against ships of war beyond 150 yards. When the men on the spar decks of the enemy, are exposed by the heeling of the ship, grape may be used against them at distances varying from 200 to 300 yards. Against light vessels, boats, or masses of men, single grape may be used, at about 400, and double at about 300 yards. The dispersion of the balls at these distances is about 30 yards.

Cannister or case shot are supplied for the boat and field howitzers, and are effective at short distances against boats or exposed bodies of men; they may be used also under favorable circumstances against the tops of an enemy.

Note on quick firing, article 201, *page* 45.

240. The Captain of the gun may prime in running out, but should not lay back the lock till the muzzle of the gun is clear of the port sill, nor fire till the side tackle falls are clear. On lower decks, besides these precautions, he is to see the port triced well up, clear of the explosion.

Digitized by Google

General Remarks.

241. When the individuals of the guns' crews have become well acquainted with, and expert in the performance of their special duties, they are to be successively transferred to the performance of the duties of some other station, until each man shall have become acquainted with the special duties of every station at the gun.

When thus well trained, by giving the words of command, it will be expedient to exercise them without giving the several detailed commands, by directing them to "load and fire!" At this command the different individuals should, each in proper order of time, silently perform his prescribed duties, of sponging, loading, running out, training and pointing, the Captain of the gun regulating the elevation and depression, by raising or lowering his hand, and by holding it horizontally and steady when the gun is "well;" and in pointing, by moving his hand to "starboard" or "port" as the gun requires to be trained, and by bringing it down to his side when it is "well." Before firing, he is to throw his hand well up as a signal for the men to "drop tackles," and is to give the word "fire" when he pulls the lockstring.

It must be apparent to every officer that both the rapidity and the accuracy of fire to be obtained from guns in vessels at sea, must depend, in a great degree, upon the care which may be taken to explain to the men, the best mode of performing their parts of the exercise, and the particular object for which each part is intended, and especially on such frequency of exercise and target firing as will make the men perfectly familiar with their prescribed duties. The importance of this subject, which may decide whether an action shall result in victory or defeat, will, it is hoped, ensure due attention to it from all officers, and and especially from the officers of divisions at quarters.

Digitized by Google

SUGGESTIONS IN CASE OF FIRE.

242. Although the measures to be adopted in case of fire, at any other time than when engaged in battle, belong rather to the general internal regulations of a ship than to those immediately connected with the preparations for battle, yet as the latter must necessarily depend much upon the former, the following suggestions are presented for consideration.

243. Should the alarm of fire be given when the men are not at quarters, that alarm of itself is to be considered as a call to quarters, and the men are to repair to their stations at once; but the ordinary call as for inspection is to be given as soon as practicable, by way of enforcing the order.

244. The Captain will direct the Executive Officer and such others as he may deem proper to visit the seat of the fire, and to transmit reports to him by officers of its character and extent, and suggest the measures which will most speedily and certainly subdue it, or prevent its extension to more dangerous parts of the ship.

245. The Officers of the respective divisions will enforce the strictest observance of orders, from those under their command, and allow no one to leave his station unless by express orders or permission. At the same time, they will direct the most trustworthy of their men, to perform any particular duty within their divisions, which may tend to check the spreading of the fire, or furnish means for extinguishing it.

246. The Officer commanding the Powder Division will, himself, see that the Gunner and his mate have the keys of the magazines, and are prepared to open the cocks and flood the powder if it should be ordered, but must take special care, that the magazines and passages are kept closed until orders to the contrary are received from the Captain.

He will also take care that the air-ports are immediately closed, and all other means adopted for diminishing currents or supplies of air, and especially if there should be a hope of confining the fire to the lower parts of the vessel,

Digitized by Google

He will at once have the hose led from the bilge cock, and if the forcing pump or engine is worked below the gun deck, will see it manned and worked by some of the men of his division.

247. The Master will cause the wind-sails to be taken down; and if they should be set, have the courses, spanker, and all lower sails hauled close up. He will have the head, channel, and all other pumps which work on the upper deck, and the fire engine, if on deck, rigged and worked by the men of his division which are stationed nearest to each of them. If practicable, the sails, rigging, boats and spars are to be kept wet, and every exertion made to furnish a full supply of water to be passed to the fire. The rigging axes and battle axes are to be ready for use in case they should be wanted for any purpose.

248. The Officers of the gun deck divisions will be prompt to detach, under proper Officers, the men who may be directed for any particular service or who may be called from the guns, by the calls for firemen or boarders. Should the call for boarders be made in case of fire, the men will answer the call without any other arms than their swords or battle axes. The Divisional Officers near the main or other pumps will cause the men of their Divisions to aid in rigging and working them. The ship's buckets are to be passed up to the pumps, as soon as possible, by the persons who may be stationed near them.

249. The Division boxes and all powder, or explosive materials not in the magazines, are to be taken in charge by the Quarter-Gunners, and placed in the safest positions, and ready to be thrown overboard if ordered.

250. The Surgeon and his assistants should be in readiness to destroy, if required, all inflammable fluids or other medical stores susceptible of ignition, and superintend the removal, if necessary, of patients who may be lame or confined to their hammocks.

251. The Captain will, if at sea, cause the ship to be hove to, or to be steered in the direction which will be least likely to increase the activity of the fire, or will best enable the men to use the means in their power for controlling and extinguishing it.

252. If fire should take place in a ship at anchor in a port or harbor, his attention must be given to prevent the communication of the fire to other vessels or combustible objects, and to have the cables ready for slipping and boats ready, and if advisable, springs prepared to change the position of the ship, either to prevent danger to other vessels, or better to apply the force for suppressing the fire.

Digitized by Google

253. He will decide whether the powder shall be drowned or water let into the shell-room, and at what time, and give the necessary orders for its being done, if it should become necessary; whether the usual rule should be countermanded of bringing up and stowing hammocks if any should be below; and whether marine sentinels should be stationed, and for what purposes.

254. In making the foregoing suggestions, no other object is proposed than to notice some of the more prominent and common preparations which may be generally made, and the means to be adopted in vessels, on the alarm of fire; but without expecting to meet the almost infinite varieties which that danger may present, and which can only be successfully met by well-trained, and well-disciplined men, judiciously directed by the Captain and superintended by officers whose coolness and presence of mind are proof against every form and degree of danger, and such as will enable them to adopt and preserve the best measures which the emergency may require.

255. Exercises, by order of the Captain, following *false alarms* of fire, known only to him and the Executive Officer to be false, at the time of giving the alarm, may, it is believed, be resorted to with advantage, especially at night.

256. Such alarms furnish the best means of ascertaining practically whether the necessary preparations for extinguishing fire have been duly attended to, and what degree of silence calmness and promptitude may be expected from officers and men in repairing to their stations as well as in the performance of their duties in a real case of fire.

257. False alarms, frequently repeated, may perhaps lead some of the men to move slowly, under the impression that every alarm given is false, and merely intended for exercise, and this impression may be entertained even when a fire has actually taken place. This evil would however be comparatively small since it will be readily admitted, by any one who has witnessed the effect of a fire upon a crew at sea, that the great difficulty in such cases, is to obtain the necessary quiet and orderly attendance at quarters, which is essential to the success of all subsequent measures.

Digitized by Google

EQUIPMENT OF BOATS

WHEN DIRECTED TO BE "MANNED AND ARMED" FOR SERVICE.

258. If it is intended that the Boats shall be sent on *distant* service that will keep them separated from the vessels to which they belong, for several days, they are to be furnished and equipped as follows; viz:—

Their proper masts, sails and awnings with appendages for their use; a set of oars complete, and spare oars for one thwart, fitted with laniards long enough to allow them to hang alongside in the water; with some proper material for muffling the oars in case it should be required; two light hand grapnels with a fathom of light chain and five fathoms of line; two boat-hooks; an anchor and chain, or rope; boat's compass; lantern and candles, tinder, flint and steel; lead and line; two battle-axes; sheet lead and tacks; a bucket and tin pot; breakers of fresh water; a vessel for cooking; a box or bag of sand to make a fire-place in the boat; and a few billets of wood, if deemed necessary.

Fishing lines and hooks; colors and signals, tourniquets; and such provisions, arms and ammunition as the nature of the intended service may require; and a good tarpaulin to cover ammunition and provisions.

259. For attack upon vessels, or other objects which will not probably require a long absence from the vessels, the provisions, cooking arrangements, fishing lines and hooks, and such other articles as may not be deemed necessary may be dispensed with.

260. When the boat and field guns are to be used, their crews are to be armed with swords, and the boats fitted as directed in pages 4, 5 and 6, of "Exercise and Manœuvres for Boat Howitzers."

261. For boarding parties, swords and pistols with pouches; and small arms loading at the breech, with filled cartridge boxes, are to be supplied. The Gunner will see that duty performed, and that every article is returned or duly accounted for, and will report all deficiences.

Digitized by Google

262. When boats "manned and armed" are ordered, the Officers assigned to the command of the boats will see that they are thus furnished, or otherwise as may be specially directed, and report when the boats are ready. They will also see that all articles are safely returned, or duly accounted for, when the boats return to the vessel.

263. If the boats are directed to rendezvous alongside of any particular vessel, the Officers are to report as they arrive there. If brought alongside of the ship of the Commander of the Squadron for *exercise*, or for *inspection*, they are to be inspected if he shall so direct, by an Officer appointed by him, whose duty it shall be to report those which may be particularly well prepared, and those which he may find deficient in equipment or arrangement.

PREPARATORY DUTIES OF CREWS OF BOATS WHEN DIRECTED TO BE "MANNED AND ARMED."

264. The *Coxswain*, when there is no Quarter-Gunner ordered, will provide, and see in place, the ammunition tanks or boxes; and, at all times, will collect the colors, and signals, compass, lead and line, if required, and see that the *spare* oars are on board and properly fitted.

265. The *Bowmen* will provide and arrange the provisions, sand with its box or bag, cooking vessel, tinder box, flint and steel, lantern and candles, and wood, if ordered.

266. The *Second Oarsman* will provide and stow the fresh water, the boat's anchor, and chain or rope, fish-hooks and lines, battle axes, sheet-lead, and tacks or nails.

267. The *Third Oarsman* will provide and stow the hand grapnels and lines, and will collect, or assist in collecting and placing all the gun implements, and in getting in and fitting the gun and carriages in place, when a gun is embarked.

268. The *Oarsmen* next to the after oarsmen will, if directed, get the masts, sails, and awnings into the boat, and have them properly placed; and will see that the oars and boat-hooks are in the boat.

269. The *After Oarsmen* will provide the tarpaulin for covering the ammunition, arms, and provisions, and the bucket and tin pots.

270. When there are oarsmen for more than five thwarts, those between the third and that next to the after one will assist the others in getting in and fitting the gun and carriage, and the masts, sails, and awnings.

Digitized by Google

271. Each oarsman will see that his own oar is properly fitted and secured by a laniard.

272. The officer will attend to procuring tourniquets if they should be directed, when the other equipments are completed.—He will also see that the men receive their arms, and that they are properly placed for security against wet. Loops or beckets should be fitted for the reception of small arms under the gunwale of the boat, and a piece of painted canvass tacked to it, so as to fall over and cover the arms.

273. When a boat and field gun is embarked, and time will permit, the Gunner will cause the sharpnel and case shot, and the cartridges, which are to be sent with the gun, to be connected for the greater convenience of simultaneous loading, and properly stowed in the ammunition boxes which are supplied for the guns. The cartridges for the boat-guns will be fitted specially to facilitate their connexion with the sabot of the shell. If the urgency of the case will not allow of this arrangement, the cartridges and shells must be put in the boat separately, and be used accordingly.

Digitized by Google

MISCELLANEOUS OPERATIONS.

MANNER OF USING THE GRIOLET-PURCHASE FOR DISMOUNTING OR MOUNTING GUNS ON COVERED DECKS.

274. Run the gun in, in the direction required to bring the muzzle under the housing bolt and the breech under the hole bored in the deck to receive the screw bolt of the upper block of the breech purchase. This hole should be bored at the time by the Carpenter through the plank in the deck, as nearly abreast the middle of the port as the beams will allow, giving the block room to play clear of the beams and carlings.

Chock the trucks, haul taut the side and train-tackles, and choke the luff; or if rolling deep, hitch the falls round the straps of the blocks; unshackle and remove the breeching; lay back, or take off the cap-squares; shove the "toggle-block" of the muzzle purchase into the bore, and secure the eye of the upper block to the housing bolt.

Shove the bolt of the upper block of the breech purchase through the hole in the deck, put on the washer above and screw down the nut, or drive in the key. Snatch the strap of the lower block in the jaws of the cascable and secure it by putting in the cascable-pin.

Hook the double block of a tackle to the thimble of the hauling part of the muzzle purchase, and another to that of the breech purchase; take the single blocks of these tackles to ring-bolts on the opposite side of the deck. With the gun's crew, clap on the breech-tackle and depress the gun as much as the carriage will allow; belay, and then clap on the muzzle-tackle and bowse the gun clear of the carriage. As soon as the gun is high enough, remove the carriage from under it, and replace it with another carriage, or lower the gun on deck as the case may require.

Digitized by Google

GETTING IN GUNS ON COVERED DECKS.

275. After bracing the yard over the port through which it is intended to take the guns, secure the lizard round the yard, five or six feet outside of the ship, and hook the top burtons just outside of the lizard.

Haul taut and bring an equal strain on the burtons and lifts. Hook a rolling tackle on the opposite side of the yard, bowse it well taut and the trusses also if they are of rope. Pass the end of the pendant of the gun-purchase through the thimble of the lizard; take the end up and make it fast round the top-mast just above the lower cap. Have the port lined with pine boards to keep it from being chafed.

Bore a hole in the deck or decks through which it is intended to pass the gurnet, as nearly as possible over the rear end of the gun carriage, and as near in a line with the centre of the port into which the guns are to come as the beams will allow. Pass the upper end of the gurnet through the hole, and turn in the thimble, to which hook the pendant tackle. Place a tackle across the deck ready for bowsing the gun into its carriage through the port.

Bring the gun under the yard and sling it as follows: place one bight of the slings over the cascable, and pass the lashing, which is attached to the slings, round the chase, at such a distance from the trunnions as will allow them to go into the trunnion-holes, without bringing too great a pressure of the slings against the upper port-sill. Then toggle or hook the gun-purchase to the outer bight of the slings and sway away. When the breech of the gun is above the port-sill, hook the gurnet and the thwart-ship tackle to the cascable, and bowse on both. When the slings bear hard on the upper port-sill, lower the gun-purchase, and bowse on the gurnet until the breech is high enough for the trunnions to clear the cap-square bolts in the carriage; then bowse on the thwart-ship tackle until the trunnions are over the trunnion-holes, lowering the purchase as required to bring the gun into its place.

As each gun is mounted, unhook the purchase and gurnet, take off the slings, run the carriage to its proper port, and place another for the next gun.

Digitized by Google

TAKING IN GUNS OVER ALL.

276. Sling the gun, slightly breech heavy, to render it more manageable. If it is to be mounted on the spar deck, place the carriage in the gangway; if on the main deck, close to the main hatchway on that deck. In place of the gurnet, hook the stay-purchase for lowering the gun into its carriage.

GETTING OUT GUNS THROUGH PORTS.

277. Secure the yard as in getting in guns, and sling the gun in the same manner. Hook the gurnet, and haul it well taut, so as to raise the breech of the gun as much as the port-sill will permit; hook or toggle the gun-purchase, and sway away. As soon as the trunnions are clear of the carriage, haul it from under the gun, ease away the gurnet, and let the gun go out the port. As soon as the gun is perpendicular to the purchase, unhook the gurnet, and lower the gun into the lighter, or on the wharf, as the case may be.

If the gun is to be taken out *over all*, the stay tackle is to be substituted for the gurnet, only it is to be hooked to the same end of the slings as the gun-purchase, and the lashing on the slings is to be passed around the chase of the gun as near the trunnions as possible.

THROWING GUNS OVERBOARD.

278. The guns' crew being assembled at quarters, remove the pin and chock from the cascable, into the jaws of which place a selvagee strap; hook the double block of the train tackle into the housing bolt over the port, and its single block into the selvagee strap; remove the cap-squares, and place a round block of wood on the sill of the port high enough to let the chace bear on it when slightly depressed; raise the breech as much as possible without lifting the gun out of the carriage. When all is ready, man the train-tackle well; have the Handspikemen also ready to assist in raising the breech; and if the vessel is not rolling, it will be well to have additional handspikes under the rear of the carriage to lift it also, so as to give free egress to the gun. When all is ready, give the order: "All together—

Digitized by Google

launch." In a gale of wind, advantage should be taken of a favorable roll to give the word, that the action of the sea and of the men at the guns may be simultaneous.

If the guns are to be thrown overboard for the purpose of lightening a ship which is aground, they must be buoyed, and care is to be taken that each buoy-rope is of a proper length, and strong enough to weigh the gun. The best mode of securing the buoy-rope to the gun is to form a clinch or splice an eye in the end which goes over the cascable, and take a half hitch with the bight around the chace of the gun, and stop it with spun-yarn.

The buoy must have sufficient buoyancy to float the rope when saturated; or, in deep water, a smaller line may be used for the buoy, and attached to the rope intended for weighing the gun, that it may be hauled up when wanted.

Digitized by Google

MANUFACTURE AND INSPECTION OF GUNS, SHOT, AND SHELLS.

INSPECTION AND PROOF OF GUN METAL.

279. When a contract for cannon for the Navy is made, the contractor shall collect a quantity of cold blast charcoal smelted pig-iron, of the best quality, sufficient to cast at least one hundred guns; or, if a less number be contracted for, the quantity shall be sufficient for the whole number of guns to be made. The iron shall be inspected by persons approved by the Chief of the Bureau of Ordnance and Hydrography, whose opinion will be taken as to its quality. The iron of the gun shall be of the second or third fusion from the ore, as the Chief of the Bureau may direct.

280. When iron for the manufacture of the guns of a contract gives satisfactory results upon inspection, the Chief of the Bureau may, if he thinks proper, have a trial gun cast therefrom, which shall be subjected to such proof as he may direct and specify in the contract. Should the trial gun fail to be satisfactory, the metal offered for trial may be rejected, and other metal which shall prove satisfactory be provided, or the contract may be annulled, at the discretion of the Chief of the Bureau. If satisfactory, the founder shall proceed to make the guns contracted for according to the specifications of the contract and the following conditions:

TESTS OF THE METAL OF GUNS.

281. The metal of guns which may be made for the naval service will hereafter be subjected to tests to ascertain its hardness, specific gravity, and tensile strength. These tests will be made by samples, which are to be taken by the contractor from the lower end of the sinking head, the part next to the muzzle of the gun. The axis of the sample is to be parallel with the axis of the casting; and its distance from the centre of the head equal to the distance between the axis of the bore and the centre of the metal in the gun when bored. The sinking head, and the gun to which it belongs, must have the same "foundry number" cast upon it. The samples, before they are

Digitized by Google

Digitized by Google

TESTING INSTRUMENT.

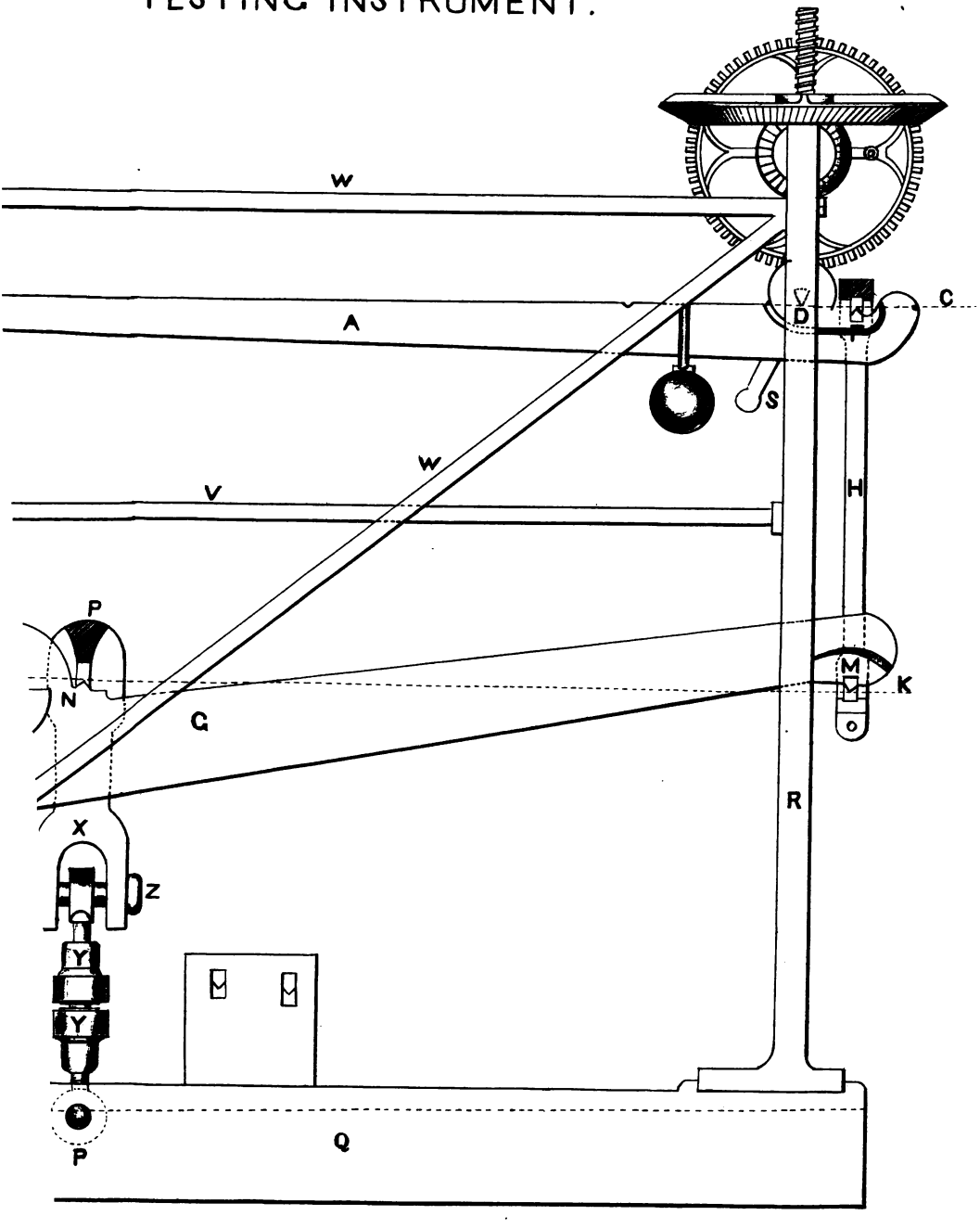

Digitized by Google

removed from the sinking head, must have the foundry numbers and the letter H stamped upon both ends of them, and they are not to be removed from the sinking heads, except in the presence of an inspecting officer, unless specially authorized or directed by the Chief of the Bureau.

282. These samples are to be tested immediately, and, when practicable, before the guns are subjected to the powder proof. The tests are to be carefully made, and duly reported to the Bureau, that they may be recorded with the other proofs and inspections, and afford the means of comparison between the metal of different guns and of different foundries.

283. The particular specific gravity, strength, and hardness which the metal must possess, will be specified in the special contracts which may be made hereafter for procuring guns.

284. Each foundry must keep an accurate record of the character, mixture, and mode of working the metal of each gun, so that its foundry number will at once refer to its date, class, weight, &c. These numbers are to be in one series, and to commence with such number as the Bureau may designate.

DESCRIPTION AND USE OF THE TESTING INSTRUMENT.

BY MAJOR WADE, ITS PROJECTOR.

285. A, the upper or first lever, to which the weights are attached, and to which the power is first applied. All its bearing knife-edge pivots are in the same horizontal plane, B, C.

286. Its fulcrum is at D, supported by an interior frame, not shown in the plate, which is attached to the screw above. The knife-edge E, from which the weights are suspended, is seventy-two inches from the fulcrum; and the knife-edge F, is three inches and six-tenths from the fulcrum, making a proportion of twenty to one.

287. G, the second lever is acted upon by the first lever through the stirrup H, which connects them. All its knife-edges are in the same plane I, K. Its fulcrum is at L, supported by the posts of the bed piece Q. The knife-edge M, which is linked with the first lever, is sixty inches from the fulcrum; and the knife-edge N, which acts directly upon the sample under trial, is six inches from the fulcrum, making the proportion of this lever ten to one. Hence, a combination of the two levers gives a proportion of two hundred to one.

Digitized by Google

288. A weight of one pound, applied on the platforms of the suspension rod O, exerts a force of twenty pounds on the stirrup H, and of two hundred pounds at the vertical axis P P, where the strain acts upon the sample.

289. The rod O, suspended from the pivot E, is provided with platforms to receive the weights.

290. The vertical frame R supports the cog-wheel geering, at the top, which is moved by the crank S.

291. The vertical piece T supports the guide U, through which the small end of the first lever passes. This guide ascends and descends evenly with the screw, by means of a rack and pinion at each end of the revolving rod V. The guide secures the lever in a position always nearly horizontal, and supports it when the sample breaks. The braces W W, secure the stability of the frame work of the instrument.

292. A screw nut is cut in the centre of the horizontal wheel at the top; which, when turned, elevates or depresses the screw, and sets in motion all the moveable parts of the instrument.

293. X is a stirrup or hanger which carries the pincers Y, used in tensile strains. The pincers are attached to the stirrup by the bolt Z, and to the bed piece by a bolt through the hole P.

294. The sample, when inserted within the pincers, has one of its ends connected with the bed piece, and the other with the second lever. The upper part of this stirrup, and the connecting stirrup H, are represented in the drawing as if the side toward the observer was removed, in order to exhibit the bearing edges.

295. A moveable weight is used, on the first lever, for adjusting the balance of the instrument in different operations, and is not counted as a part of the force applied. The position which it occupies in the drawing, is that which gives the proper adjustment for tensile strains. It is placed in the notch ⊖ for transverse strains. In torsional strains, it is placed near the small end of the lever. All its several positions are marked and lettered on the instrument.

The weights used are of three denominations, viz:

Diameters of each - - - -	2.2 ; 5. ; 8. inches.
Actual weight of each - - - -	0.5 ; 5. ; 25. pounds.
Strain represented by each - -	100 ; 1,000 ; 5,000 pounds.
Number of each denomination, -	10 ; 10 ; 8
Aggregate strains of all the weights - - -	51,000 pounds.

296. The ring permanently attached at the bottom of the suspen-

Digitized by Google

Digitized by Google

SLIDING CALIPERS..

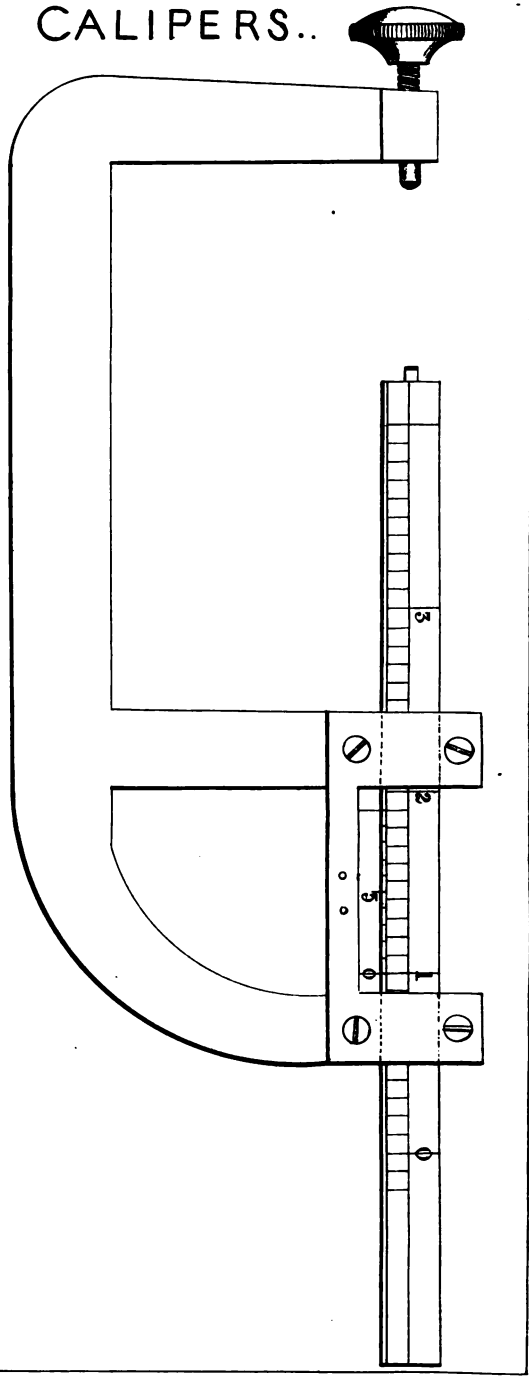

PROOF SAMPLE.

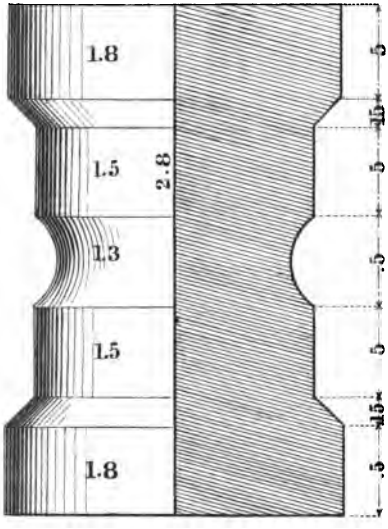

Digitized by Google

sion rod, represents one of the large weights, 5,000 pounds, and is always to be counted as such in summing up the force applied.

297. The preponderance of the first lever, with its weight holders attached, is such, that when a sample is inserted for trial, and the balance weight is placed in the adjusting position, adapted to the sample holders in use at the time, a weight of five thousand pounds, acting in the line P P, is required to produce an equipoise of the instrument.

298. The screw and all the knife-edges, and the lines on which they bear, are made of hardened cast-steel. All other principal parts are of cast-iron.

299. The instrument is provided with means for determining the resistance of metals to transverse, tensile, torsional, crushing, and indenting forces. The first two only are exhibited in the plate.

300. The plate gives the form of the *sliding callipers*, an instrument used for measuring the samples tested, drawn to full size. It is provided with a vernier, which measures hundredths of an inch, directly, when any of its lines coincide with the lines on the scale.

301. When none of the lines coincide exactly, thousandths of an inch may be accurately determined by a practised eye. Before using the callipers, the steel points should be pressed together gently, and the zeros of the scale and of the vernier be made to coincide by turning the adjusting screw. To prevent accidental derangements of the adjustment, the screw is made to fit so closely that a vice is needed in turning it.

DIRECTIONS FOR PREPARING SPECIMENS FOR TESTING GUN METAL AND FOR USING THE TESTING INSTRUMENT.

302. The quality of the iron, as it exists in the gun, is more accurately represented by the sample taken from its sinking head than by any sample which can be obtained from any other part of the gun casting, or from the proof bar cast in a separate mould; but, as samples cannot be obtained from the heads of large guns until several days after they are cast, separate proof bars are made and tested, to aid in directing the progress of the work. This enables the superintendent to determine the relative quality of the iron soon after it is cast, and in the intervals between each successive daily casting.

Digitized by Google

For the purpose of an inspection, which is to ascertain the qualities of the iron as it exists in the guns, samples taken from the heads only are all that need be tested.

303. The proof bars designed for testing transversely may be from two to three inches square, and either twenty-three or thirty-three inches long. The bars are cast at the same time as the gun, and from the same melting of iron. They are cast separately in vertical dry sand moulds; and the iron for this purpose is taken from the running stream as it passes from the furnace to the gun mould.

304. In order to obtain a suitable sample for determining the specific gravity and the tensile strength of the proof bar, a cylindrical piece five inches long and two inches diameter is added at the lower end of the square bar, and cast with it in one piece.

305. Bars of two inches square and twenty-three inches long are found to be sufficient for the transverse strains, and are more convenient than large bars. The whole length of this bar, including the round part, is twenty-eight inches—five inches of the lower end being round, and the remainder square.

306. The round part is cut off from the square part, and the latter is prepared for the transverse test by a slight dressing with the file or grindstone on one of its faces near each end, in order that the bar may bear evenly against the supports when under the strain. The middle of the bar—the part where the fracture occurs—is dressed in like manner on each of its four faces, in order that its breadth and depth in this part may be accurately measured.

307. There are two sets of supports in the instrument for transverse tests. The distance between them, in one set, is twenty inches; in the other, thirty inches.

308. The bar, when placed in the instrument for testing, rests in the middle of its length on the knife-edge in the bottom of the stirrup. The latter is then drawn upward by means of the key at the top, until the ends of the bar bear firmly against the knife-edge supports in the bed-piece of the instrument. The index scale for measuring the deflection of the bar is then adjusted to its zero. The strain is then applied by turning the crank in the direction which raises the screw, which sets in motion all the moveable parts of the instrument. As the strain is increased, weights are applied from time to time in such manner as will keep the lever evenly balanced, so that the force

Digitized by Google

applied at the instant of breaking may be accurately determined by counting the weights then on the platforms.

309. The first lever retains its horizontal position in all the movements of the instrument, as the base on which its fulcrum rests is moveable. The fulcrum of the second lever, which is at one end, rests on an immoveable base; and the other end declines more or less in all its movements.

310. The knife-edges in this lever should be in a horizontal plane at the time when the sample breaks. To insure this condition, the instrument is so adjusted at the beginning of the strain as will place the knife-edge at the small end of the lever as much below the horizontal as it will ascend during the application of the breaking force.

311. After the bar is broken transversely, its breadth and its depth are accurately measured near the fracture; and, as the dimensions are irregular, it is proper to measure in three places for the breadth, and the same for the depth—one measure to be taken in the middle of the bar, and the other two near the corners—the mean of the three measures to be taken as the true dimension. If the bar is defective, the results cannot, of course, be relied on.

312. The unit of transverse strength represents the weight required to break a bar of the same material one inch square, supported horizontally at one end, the weight being applied at one inch from the point of support. The tranverse strength ($= S$) is determined by the following formula:

$$S = \frac{\frac{1}{4} L\, w}{b\, d^2}$$

L being the length between the lines of support at the ends of the bar, w the breaking weight, b the breadth of the bar, and d its depth.

EXAMPLE.—Proof bar No. 484, cast separately:

	Log.
$b = 1.969$ (mean of 3 measurements)	0.2942457
$d = 1.9683$ (mean of 3) log. $0.2940913 \times 2 = d^2$	0.5881826
	—0.8824283
$\frac{1}{4} L, \times w, = \frac{20}{4} \times 13900 \quad = 69500$	4.8419848
Transverse strength, $= S =$ 9111. lbs. $=$	3.9595565

Deflexion, extreme, to be noted.

Digitized by Google

313. The round part of the proof bar is prepared for determining its density and tensile strength by reducing it to a form that will fit the pincers, and of such bulk as will not exceed the buoyancy of the hydrometer, and is marked at both ends with the letter B.

314. The plate exhibits a sample of full size from gun-heads or proof bars: one side is represented as a section. The sample may be increased or diminished in length in any part except the head, to make it conform to the buoyancy of the hydrometer. If the heads be less in weight than is represented, the fracture may occur at the junction of the head with the body of the sample.

315. To determine the density, the sample is weighed in air and in pure distilled water. The instrument employed for this purpose is made on the principle of Nicholson's hydrometer, and in the form given in the plate.

Its maximum buoyancy is 14,000 grains; but this is reduced, when weighing lighter samples, by adding at the bottom one or more adjusting weights, which varies it from 14,000 to 6,500 grains.

316. The diameter of its index stem is 0.71 inch, which sinks one inch with a weight of one grain.

317. The zero mark is in the middle of the length of the stem. The dish which carries the weight is attached to the top of the stem by an open socket on its underside, in order that it may be separated from it without removing its contents after each weighing. The weights are marked in grains decimally divided, varying from one-tenth of a grain to four thousand grains. The weights are counted and recorded after the dish is removed from the stem, and are then verified before removing them from the dish.

318. The vessel which contains the water is a glass jar twelve inches diameter and twenty-one inches high. It is filled with water to such height, that nearly the whole length of the index stem will be immersed, when the hydrometer has descended to the bottom of the jar.

319. A thermometer is suspended in the water, and its temperature is noted at each weighing. The temperature of 60° Fahrenheit is taken as the standard; and, when a sample is weighed in water of any other temperature, the weight of water displaced by it is corrected by the table compiled for that purpose.

320. The hydrometer may be employed to determine the relative den-

Digitized by Google

ADJUSTING WEIGHTS.

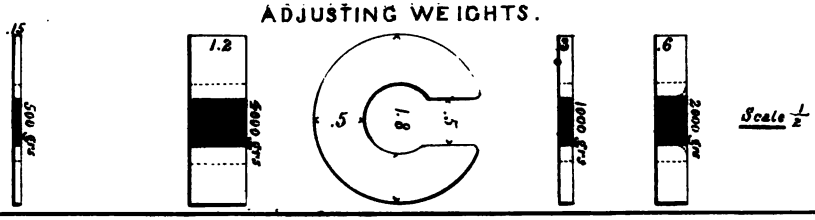

HYDROMETER,
IMPROVED BY MAJ^{R} W WADE.

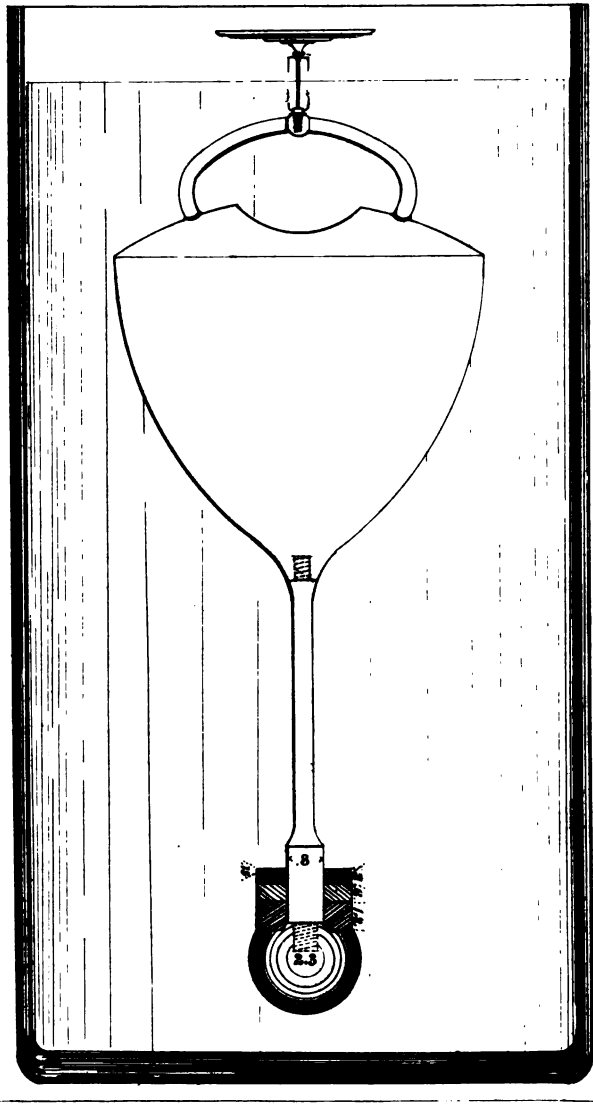

Stellwagen.

Digitized by Google

Digitized by Google

sity of distilled water, and any other kind of water. The weight of the hydrometer, together with its balance weight in distilled water, at the temperature of 60°, determines the weight of a quantity of standard water equal in bulk to the immersed part of the instrument.

The weight of the hydrometer and its load, when immersed in like manner in any other water at the same temperature, determines the weight of a corresponding bulk of the latter; and this weight, divided by the former, gives the multiplier for correcting the density, when ascertained in any other than distilled water.

With this method of correcting the density, clear rain or river water may be conveniently substituted for distilled water in cases where large quantities are required.

321. In determining the density of samples, first load the weight-dish with the grain weights until the hydrometer is immersed to its zero mark, and then record the sum of the weights in the dish as the *balance of the hydrometer*. Next remove the weights and place the sample in the dish with as many weights as will bring the hydrometer again to its zero point, and record the sum of these weights as the balance with the *sample in air*. The difference between these balances is the weight of the sample in air. Then place the sample on the bulb, and immerse both until the hydrometer is again adjusted to its zero, and then record the weights employed in this adjustment as the *balance with the sample in water*. The difference between this balance and that given by the sample in air is the weight of water displaced by the immersed sample.

322. The temperature of the water at the time of weighing the immersed sample is observed and noted. If it is not at 60°, the weight of water displaced by the sample is divided by the tabular number opposite the noted temperature, and the quotient gives the corrected displacement. The weight of the sample in air, divided by the corrected displacement, gives the density.

Digitized by Google

EXAMPLE.

Sample No. 4 H, from gun head:

Balance of the hydrometer	11485.0
Balance with sample in air	923.0
Difference = weight of sample in air	10562.0
Balance with sample in water	2370.4
Do. do. in air	923.0
Difference = weight of water displaced: noted temperature $72\frac{1}{4}^{\circ}$	1447.4

Tabular number $72\frac{1}{4} = .998912$

Then $\frac{1447.4}{.998912} = 1449.0 =$ corrected displacement.

And $\frac{10562}{1449} = 7.289 =$ density.

Or by logarithms:

	Logarithms.
Water displaced at $72\frac{1}{4}^{\circ} = 1447.4$	3.1605886
Tabular number for $72\frac{1}{4}^{\circ} = .998912$	$\bar{1}$.9995274
Logarithm of corrected displacement	3.1610612
Weight of sample in air = 10562	4.0237461
Corrected displacement	3.1610612
Density = 7.289 =	0.8626849

If impure water has been used, correct the ascertained density by the rule given in paragraph 320.

323. After the density is ascertained, and before the sample is inserted in the pincers for the tensile test, its smallest diameter in the middle is accurately measured and recorded. The breaking weight is divided by the area of its smallest diameter, and the quotient gives the tenacity, or the strength per square inch.

EXAMPLE.

Sample No. 4 H, from gun head:

	Logarithms.
Breaking weight, 50500	4.7032914
Diameter, 1.25. Area, 1.22719	0.0889099
Tenacity, or strength per square inch, 41151 lbs.	4.6143815

324. In taking the specific gravity of iron, the operations are unavoidably performed with water at different temperatures, varying with the state of the weather at the time; and as the density of the water varies with its temperature, it is necessary to note the temperature of the water at the time of weighing the sample, and to reduce the ascertained density to what it would have been if the sample had been weighed in water at the temperature of the assumed unit.

Digitized by Google

325. Mr. Hassler made an elaborate investigation of the subject in 1831. He ascertained the weight of water displaced by a given glass bulb at 215 different points of temperature, varying from 32° to 86° Fahrenheit.

The weighings were made at such irregular intervals of temperature as the chances of the weather gave at the moment of weighing.

326. The recorded results of these experiments did not conform to any regular division of temperature, and being, consequently, of no practical value for ordinary use, were reduced to an equal and uniform division of the thermometrical scale. The method adopted was, to prepare maps upon a large scale, exhibiting the noted temperatures on parallel vertical lines, and the corresponding weight of water on horizontal lines; then to trace a curved line through the intersecting points, or as near to them as their diverse positions would permit.

327. In tracing this line, the anomalous results of the weighings are corrected, and the curve exhibits accurately the weight of water corresponding to every minute division of temperature along the whole line. The vertical lines of temperature are subdivided into equal spaces corresponding to quarters of degrees. The intersection of these with the curve determines the weight of water displaced at each quarter of temperature from 32° to 86°.

328. The annexed table was compiled from these maps, giving the following particulars, in separate columns, for each quarter degree, viz: The weight of water displaced in troy grains, as determined by the curved lines, the corresponding weight of water reduced to a unit, the differences of weights, and the logarithmic numbers of the the several weights. The same table contains, also, the temperature and corresponding weights of water, as given in the report of Mr. Hassler from which the maps have been compiled.

329. The temperature of 60° Fahrenheit has been taken as the unit, because that is about the medium temperature which occurs in ordinary practice.

Digitized by Google

WEIGHT OF DISTILLED WATER DISPLACED BY A GIVEN GLASS BULB AT DIFFERENT TEMPERATURES, COMPILED BY W. WADE,* FROM HASSLER'S REPORT ON WEIGHTS AND MEASURES, MADE IN 1832. SEE CONG. DOC. No. 299, 1st SESS., 22d CONGRESS.

HASSLER'S REPORT.		COMPUTED RESULTS.				
Temperature, Fahr.	Weight of water displaced. (Grains.)	Temperature, Fahr.	Weight of water displaced. (Grains.)	Weight of water reduced to an unit.	Differences.	Logarithms of weights.
		°				
32.20	227.787.04	32.00	227.784.50	1.000.395	.000011	0.0001706
32.40	788.94	.25	787.50	406	14	.0001764
32.57	790.94	.50	790.75	420	13	.0001825
33.11	794.41	.75	793.65	433	11	.0001880
33.16	798.20	33.00	796.10	444	11	.0001928
33.47	806.07	.25	798.60	455	12	.0001975
33.50	802.00	.50	801.40	467	12	.0002028
33.52	801.54	.75	804.05	479	10	.0002078
34.07	807.97	34.00	806.40	489	10	.0002123
34.60	811.60	.25	808 75	499	11	.0002167
34.61	810.66	.50	811.15	510	9	.0002214
34.72	812.58	.75	813.20	519	8	.0002253
34.80	812.71	35.00	815.00	527	8	.0002288
34.87	815.25	.25	817.20	536	9	.0002329
35.27	820.58	.50	819.15	545	8	.0002366
35.32	820.87	.75	821.00	553	7	.0002401
35.33	816.36	36.00	822.65	560	6	.0002432
35.40	818.38	.25	824.05	566	6	.0002459
35.47	820.72	.50	825.25	572	5	.0002483
35.55	818.04	.75	826.45	577	4	.0002504
35.61	821.99	37.00	827.44	581	5	.0002523
35.62	820.01	.25	828.40	586	3	.0002542
35.80	823.89	.50	829.40	589	6	.0002561
35.85	824.37	.75	830.40	595	4	.0002581
36.08	824.60	38.00	831.60	599	5	.0002603
36.27	823.32	.25	832.60	604	5	.0002622
36.45	827.21	.50	833.65	609	5	.0002642
36.50	819.60	.75	834.90	614	5	.0002666
36.57	825.94	39.00	836.40	619	9	.0002685
36.58	826.62	.25	838.00	628	7	.0002725
36.71	827.22	.50	839.60	635	7	.0002755
36.73	822.07	.75	841.15	642	4	.0002786
36.73	821.87	40.00	842.20	646	3	.0002806
36.74	826.94	.25	842.80	649	1	.0002817
36.78	824.13	.50	843.00	650	maximum weight.	.0002821
37.22	824.85	.75	843.00	650		.0002821
37.40	832.20	41.00	842.90	649	1	.0002819
37.48	826.64	.25	842.70	649	0	.0002815
37.51	830.47	.50	842 40	647	2	.0002810

*Assisted by Lieut. Dyer, U. S. A., in the preparation of the maps, and Lieutenant Rodman, U. S. A., in making the computations for the table.

Digitized by Google

HASSLER'S REPORT.		COMPUTED RESULTS.				
Temperature, Fahr.	Weight of water displaced. (Grains.)	Temperature, Fahr.	Weight of water displaced. (Grains.)	Weight of water reduced to an unit.	Differences.	Logarithms of weights.
		°				
37.77	227.830.49	41.75	227.842 00	1.000.645	.000002	0.0002802
38.05	929.34	42.00	841.70	644	1	.0002796
38.40	834.77	.25	841.45	643	1	.0002792
38.72	836.02	.50	841.20	642	1	.0002787
38.87	832.24	.75	840.90	641	1	.0002781
38.90	832.94	43.00	840.50	639	2	.0002774
39.15	842.88	.25	840.10	637	2	.0002766
39.16	834.72	.50	839.65	635	2	.0002756
39.23	832.22	.75	839.20	633	2	.0002748
39.26	837.07	44.00	838.73	631	2	.0002740
39.28	834.87	.25	838.25	629	2	.0002731
39.30	837.90	.50	837.74	626	3	.0002721
39.43	837.95	.75	837.17	624	2	.0002710
39.53	845.77	45.00	836.60	621	3	.0002699
39.57	840.12	.25	835.95	619	2	.0002687
39.65	840.86	.50	835.30	616	3	.0002675
39.98	842.75	.75	834.60	613	3	.0002660
40.10	844.53	46.00	833.86	610	3	.0002646
40.20	840.25	.25	833.04	606	4	.0002631
40.21	843.63	.50	832.20	602	4	.0002615
40.23	840.92	.75	831.30	598	4	.0002598
40.26	845.09	47.00	830.25	594	4	.0002578
40.34	846.26	.25	829 20	589	5	.0002558
40.35	845.50	.50	828.10	584	5	.0002537
40.38	838.60	.75	826.95	579	5	.0002515
40.40	845.58	48.00	825.80	574	5	.0002493
40.41	838.45	.25	824.65	569	5	.0002470
40.53	839.61	.50	823.45	564	5	.0002448
40.73	841.75	.75	822.05	558	6	.0002421
40.80	845.62	49.00	820.60	551	7	.0002393
40 95	843.59	.25	819.15	545	6	.0002366
41.14	843.16	.50	817.63	538	7	.0002336
41.17	845.54	.75	816.05	531	7	.0002306
41.30	839.22	50.00	814.45	524	7	.0002276
41.61	847.00	.25	812.75	517	7	.0002244
41.76	842.38	.50	810.80	508	9	.0002207
41.80	839.07	.75	808 80	499	9	.0002168
41.80	842.24	51.00	806.80	490	9	.0002130
42.23	838.88	.25	804.75	482	8	.0002191
42.28	838.54	.50	802.60	472	10	.0002050
42.50	838.48	.75	800.30	462	10	.0002007
42.73	839.14	52.00	797.90	452	10	.0001961
43.19	840.69	.25	795.45	441	11	.0001915
46.35	835.31	.50	793.05	430	11	.0001869

Digitized by Google

HASSLER'S REPORT.		COMPUTED RESULTS.				
Temperature, Fahr.	Weight of water displaced. (Grains.)	Temperature, Fahr.	Weight of water displaced. (Grains.)	Weight of water reduced to an unit.	Differences.	Logarithms of weights.
		°				
46.65	227.833.31	52.75	227.790.55	1.000.419	.000011	0.0001821
47.67	829.90	53.00	788 10	409	10	.0001775
47.75	832.00	.25	785.60	398	11	.0001727
48.12	828.38	.50	783.10	387	11	.0001679
48.20	827.85	.75	780.25	374	13	.0001625
48 32	821.07	54.00	777.55	363	11	.0001574
48.38	822.24	.25	774.50	349	14	.0001515
48.40	825.52	.50	771.88	337	12	.0001465
48.55	821.77	.75	768.35	322	15	.0001398
48.72	823.11	55.00	765.45	307	15	.0001348
48.80	824.17	.25	762.50	296	11	.0001286
48.90	820.78	.50	759.15	282	14	.0001223
49.07	812.96	.75	755.90	267	15	.0001161
49 15	818.64	56.00	752.90	254	13	.0001103
49.17	814.98	.25	749.55	239	15	.0001040
49 34	817.01	.50	746.05	224	15	.0000973
49.40	816.78	.75	742.80	209	15	.0000910
50.09	812.35	57.00	739.50	195	14	.0000846
50.25	811.01	.25	736.15	181	14	.0000783
50.32	814.71	.50	732.67	165	16	.0000717
50.55	811.65	.75	728.85	148	17	.0000644
50.60	809.47	58.00	725.40	133	15	.0000579
50.62	810.31	.25	721.88	118	15	.0000512
50.67	808.96	.50	718.05	101	17	.0000439
50.79	808.28	.75	714.35	085	16	.0000368
50.92	807.68	59.00	710.60	068	17	.0000296
51.06	806.35	.25	706.69	051	17	.0000222
51.11	784.03	.50	702.90	034	17	.0000149
51 35	804.86	.75	698.80	017	17	.0000072
51.50	800.59	60.00	695.00	1.000.000	17	0.0000000
52.00	785.71	.25	690.80	0.999.981	19	$\bar{1}$.9999919
52.20	783.77	.50	686.60	963	18	.9999839
52.26	794.30	.75	682.50	945	18	.9999760
53.20	782.48	61.00	678.30	927	18	.9999681
54.30	774.93	.25	674.25	909	18	.9999603
54.60	775.34	.50	670.00	890	19	.9999522
56.40	774.63	.75	665.75	871	19	.9999440
56.87	740.10	62.00	661.55	853	18	.9999361
57.77	728.92	.25	657.25	834	19	.9999280
57.80	729.26	.50	652.75	814	20	.9999193
57.83	728.69	.75	648.25	795	19	.9999108
57.85	727.78	63.00	643.70	774	21	.9999020
58.00	726.47	.25	638.90	753	21	.9998929
58.05	725.15	.50	634.25	733	20	.9998840
58.37	709.63	.75	629.45	712	21	.9998747

Digitized by Google

HASSLER'S REPORT.		COMPUTED RESULTS.				
Temperature, Fahr.	Weight of water displaced. (Grains.)	Temperature, Fahr.	Weight of water displaced. (Grains.)	Weight of water reduced to an unit.	Differences.	Logarithms of weights.
		°				
58.61	227.715.83	64.00	227.624.85	0.999.69[illegible]	.000020	$\bar{1}$.9998660
58.65	716.93	.25	620.30	672	20	.9998574
59.28	712.46	.50	615.50	651	21	.9998483
59.60	703.48	.75	610.55	629	22	.9998388
59.75	698.26	65.00	605.60	608	21	.9998294
60.13	683.07	.25	600.60	585	23	.9998198
60.28	690.79	.50	595.65	563	22	.9998104
60.50	695.20	.75	590.80	542	21	.9998011
60.70	683.66	66.00	585.90	521	21	.9997918
60.91	680.24	.25	580.90	499	22	.9997822
61.42	681.40	.50	575.90	479	20	.9997737
62.30	654.03	.75	570.85	454	25	.9997630
62.81	646.15	67.00	565.75	432	22	.9997533
64.18	619.63	.25	560.65	409	23	.9997435
64.31	611.77	.50	555.55	387	22	.9997338
64.56	618.30	.75	550.55	365	22	.9997243
64.80	602.78	68.00	545.45	343	22	.9997146
65.06	603.15	.25	540.25	320	23	.9997047
65.20	599.82	.50	534.95	297	23	.9996945
66.35	574.82	.75	529.55	273	24	.9996843
68.20	549.13	69.00	524.20	249	24	.9996740
68.65	530.72	.25	518.75	226	23	.9996636
69.15	524.26	.50	513.30	203	24	.9996532
69.26	520.84	.75	507.78	179	24	.9996427
69.40	508.74	70.00	502.20	153	25	.9996320
69.47	518.10	.25	496 30	127	26	.9996208
69.60	511.71	.50	490.55	102	25	.9996098
69.75	508.20	.75	484.70	076	26	.9995985
70.30	491.98	71.00	478.80	050	26	.9995873
70.43	488.98	.25	472.85	024	26	.9995759
70.65	493.12	.50	466.70	0.998.997	27	.9995642
70.70	481.13	.75	460.40	969	28	.9995522
70.80	481.28	72.00	454.10	942	27	.9995401
71.05	474.15	.25	447.40	912	30	.9995274
71.40	474.43	.50	440.95	884	28	.9995150
71.42	467.48	.75	434.45	855	29	.9995027
71.65	466.66	73.00	427.40	825	20	.9994892
71.67	463.98	.25	420.75	795	30	.9994765
71.75	462.75	.50	413.95	766	29	.9994635
72.30	431.58	.75	407.15	736	30	.9994506
72.50	446.17	74.00	400.20	705	31	.9994373
73.70	407.07	.25	393.30	675	30	.9994241
73.95	404.75	.50	386.60	645	30	.9994113
74.17	398.23	.75	379.60	615	30	.9993979
74.25	395.32	75.00	372.55	584	31	.9993845

Digitized by Google

HASSLER'S REPORT.		COMPUTED RESULTS.				
Temperature, Fahr.	Weight or water displaced. (Grains.)	Temperature, Fahr.	Weight of water displaced. (Grains.)	Weight of water reduced to an unit.	Differences.	Logarithms of weights.
		°				
74.40	227.395.71	75.25	227.365.45	0.998.553	.000031	$\bar{1}$.9993710
74.55	383.42	.50	358.38	521	32	.9993574
74.60	384.96	.75	351.70	492	29	.9993446
74.72	384.73	76.00	344.75	461	31	.9993313
74.75	377.10	.25	337.45	430	31	.9993175
75.00	374.22	.50	330.35	399	31	.9993039
75.10	366.62	.75	323.35	367	32	.9992904
75.15	365.90	77.00	316.35	337	30	.9992771
75.70	351.00	.25	310.00	309	28	.9992649
75.70	348.00	.50	303.00	278	31	.9992515
75.75	349.83	.75	296.00	248	30	.9992382
75.90	348.33	78.00	288.80	216	32	.9992244
76.10	334.83	.25	281.45	184	32	.9992104
76.20	336.57	.50	274.20	152	32	.9991965
76.20	333.50	.75	266.90	120	32	.9991826
76.55	325.23	79.00	259.60	088	32	.9991686
76.80	319.12	.25	252.20	055	33	.9991545
78.30	272.18	.50	244.65	022	33	.9991400
78.50	266.46	.75	237.15	0.997989	33	.9991258
78.52	272.71	80.00	229.60	956	33	.9991113
78.72	272.94	.25	222.10	923	33	.9990970
79.37	253.69	.50	214.40	889	34	.9990822
79.78	237.45	.75	206.55	855	34	.9990673
79.91	236.30	81.00	198.90	821	34	.9990526
80.22	223.82	.25	191.40	788	33	.9990383
80.54	212.30	.50	183.55	754	34	.9990233
80.85	213.69	.75	175.45	718	36	.9990079
80.85	210.69	82.00	167.05	681	37	.9989918
81.00	205.32	.25	158.65	644	37	.9989756
81.12	196 16	.50	150.25	607	37	.9989596
81.15	203.25	.75	142.00	571	36	.9989438
81.45	188.82	83.00	134.05	536	35	.9989286
81.47	186.00	.25	126.25	500	36	.9989138
81.53	182.04	.50	118.45	468	33	.9988989
82.00	165.75	.75	110.50	433	35	.9988837
82.43	154.99	84.00	102.60	398	35	.9988684
82.53	153.55	.25	094.65	363	35	.9988532
82.57	158.75	.50	086.50	327	36	.9988378
82.95	140.23	.75	078.40	292	35	.9988223
83.15	132.51	85.00	070.30	256	36	.9988068
83.65	111.97	.25	062.00	220	36	.9987908
86.23	030.71	.50	053-75	183	37	.9987750
		.75	046.05	150	33	.9987604
		86.00	038.37	116	34	.9987456

NOTES BY THE EDITOR.

1. The temperature at which vessels of different materials will hold the greatest

Digitized by Google

330. To make the corrections for the weight of water displaced when the body is weighed at any other temperature than 60°, divide the ascertained displacement by that number in the fifth column of the table which corresponds with the noted temperature, and the quotient will be the weight of water which the same body would have displaced in the same water if weighed at the temperature of 60°. Or by logarithms subtract the logarithm opposite the noted temperature from the ascertained logarithm of displacement, and the remainder will be the logarithm of the corrected displacement. The volume of the body weighed changes with variations of temperature, and this will cause a slight error when the weighings are made at extremes of temperature. But as the difference between the dilatation by heat of the glass bulb and cast-iron is immeasurable, error from this cause may be neglected.

The following table contains the areas and their logarithms for all the variations of diameter likely to occur in tensile samples:

DIAM	AREA.	LOGARITHMS.	DIAM.	AREA.	LOGARITHMS.
1.190	1.11220	.0461839	1.290	1.30698	.1162693
1.191	1.11407	.0469135	1.291	1.30901	.1169423
1.192	1.11594	.0476425	1.292	1.31104	.1176148
1.193	1.11782	.0483707	1.293	1.31307	.1182868
1.194	1.11969	.0490985	1.294	1.31510	.1189583
1 195	1.12157	.0498257	1.295	1.31713	.1196293
1.196	1.12345	.0505523	1.296	1.31917	.1202998
1.197	1.12533	.0512783	1.297	1.32120	.1209698
1.198	1.12721	.0520035	1.298	1.32324	.1216393
1.199	1.12909	.0527283	1.299	1.32528	.1223083
1.200	1.13097	.0534523	1.300	1.32732	.1229767
1 201	1.13286	.0541759	1.301	1.32937	.1236446
1.202	1.13475	.0548989	1.302	1.33141	.1243120
1.203	1.13664	.0556211	1.303	1.33346	.1249788
1.204	1.13853	.0563429	1.304	1.33550	.1256451
1.205	1.14042	.0570639	1.305	1.33755	.1263109
1.206	1.14231	.0577845	1.306	1.33960	.1269763
1.207	1.14421	.0585045	1.307	1.34165	.1276411
1.208	1.14610	.0592237	1.308	1.34370	.1283033
1.209	1.14800	.0599425	1.309	1.34576	.1289691
1.210	1.14990	.0606607	1.310	1.34782	.1296325

weight of water, is different for each metal or other material, expansible by heat; for glass it is 41° 6′, for copper vessels 44° 6′, &c., while absolutely taken, the maximum density of water is 39° 8′. Page 88, Hassler's Report.

2. The weight of one cubic inch of water at 62° Fahrenheit, is 252.458 grains.—Hassler's Report.

Digitized by Google

FORM OF REPORT.

REPORT OF THE DENSITY AND TENSILE STRENGTH OF THE SPECIMENS TAKEN FROM THE FOLLOWING CANNON, CAST FOR THE NAVAL SERVICE OF THE UNITED STATES, By ———— ————, *Assist. Inspector of Ord.*

DATE. 185 —

Foundry marks.	GUN NUMBERS.		CLASS OF GUN.		Date.	Density.	Tensile strength per square inch. lbs.	Part of gun from which specimen was taken.
	Foundry.	Register.	Calibre.	Weight.				
	800.	200.	8 inch.	63 cwt.		7.24000.	33.000.	

Digitized by Google

INSPECTION AND PROOF OF NAVAL GUNS.

331. A proper proving ground and facilities for proving cannon shall be provided by the founder, and the guns placed thereon at his expense.

INSTRUMENTS.

1. *Mirrors* for reflecting the sun's rays into the bore.

2. *Spirit-lamp* and *Reflecting Apparatus* for examining bores in cloudy weather.

3. *Cylinder Gauge* for each calibre, turned to the exact minimum (or true) diameter of the bore, with staff.

4. *Star Gauge* for measuring the diameter of the bores, and of the cylindrical part of the chambers of guns, complete with ⊤ rest and sets of points.

5. *Standard Ring Gauges* of each calibre for adjusting the Star Gauge for use.

6. *Measuring Rod* of white pine, marked with the proper length of the bore: lower end shaped to coincide with the form of the bottom of the bore.

7. *Trunnion Gauges* for measuring the diameters of trunnions of each calibre of guns. The exterior diameter of these gauges serves to verify that of the rimbases.

8. *Scribe Compass* for laying off the distance of the centre of the trunnions from the base ring.

9. *Trunnion Square* with moveable branches and sliding point, for ascertaining the position of the trunnions in relation to the axis of the bore.

10. *Graduated Steel Wedge* for determining small differences of diameters.

11. *Crutch Rule*, of white pine, for measuring the distance of the trunnions from the rear of the base ring.

12. *Exterior Profile Board* for verifying exterior lengths, having the lower edge adapted to the shape of the gun, and the upper one paral-

Digitized by Google

lel to the axis of the bore. The true distances of the several parts from the rear of the base ring are laid off on the upper edge and marked in lines perpendicular to it on the sides of the profile.

13. *A Rammer Head* shaped to the form of the bottom of the bore and furnished with a staff, for ascertaining the interior position of the vent. A *profile board* similarly shaped, and with a groove on the edge to hold putty, may be used for the same purpose and to verify the curve of the bottom of the bore.

14. *Profile Blocks* for examining sight masses and lock pieces.

15. Two *Cascable Blocks*, one for measuring the mouth and the other the jaws of the cascable; the latter is cylindrical.

16. *Set Gauges*, for measuring exterior diameters, used in turning and provided by and at the foundry.

17. *Vent Gauges*—two pieces of untempered steel wire, 0.005 inch greater, and less than the true diameter of the vent.

18. *Vent Searcher*—a steel wire bent at the lower end, for searching the sides of the vent.

19. *Semi-circular protractor* for measuring inclination of vent.

20. *A full set of implements* for loading and cleaning guns.

21. *Ring Gauges*—one large, one small, and one mean, for inspecting the shot used in the proof.

22. *Hydraulic press and Apparatus* for water proof.

23. *Searcher*, with not less than six prongs, for detecting cavities in the bore.

24. *Standard Foot Rule*, of metal, for verifying instruments.

25. *Figure and Letter Stamps* for marking guns.

26. *A Beam Compass* to use with the standard scale for verifying measures.

FOR USE IN NAVY YARDS.

27. *Callipers, large and small*, to measure diameters.

28. *Iron Square* for setting callipers, graduated decimally and having a stud at zero, one-tenth of an inch square.

332. Guns offered for inspection, shall be scraped and cleaned, if rusted, and their foundry numbers noted. They shall then be examined carefully, inside and out, for defects of metal or manufacture.

333. They must not be covered with paint, lacker, oil, or any other

Digitized by Google

material. If it is ascertained that any attempt has been made to conceal defects, the gun is to be rejected without further examination.

334. Before proceeding to verify the dimensions of a gun, the Inspector will assure himself, that such instruments as gauges, profiles, measuring rods, etc., are accurately set or marked according to the dimensions given in the tables or draughts furnished by the Bureau of Ordnance, and will see that the necessary corrections are made by the standard rule.

335. The interior of the bore is to be examined by reflecting the rays of the sun into it from a mirror, or if the sun is obscured, by the reflector and spirit lamp.

336. The cylinder gauge is then introduced, which must pass to the bottom of the cylindrical part of the bore, or the bore is too small. The exact diameters of the bore, and of the cylindrical part of the chambers of chambered guns, are measured with the star gauge, at intervals of ¼ inch in the part of the bore occupied by the shot, of one inch in the rest of the bore behind the trunnions, and of about 1 calibre from the trunnions to the muzzle.

337. To verify the position of the axis of the trunnions, set the trunnion square on them, and see that the lower edges of its branches touch them throughout their whole length; push the slide down till it touches the surface of the piece opposite the axis of the trunnions, and secure it in that position by the thumb screw; turn the gun over and apply the trunnion square to the opposite side at the same distance from the base, and if when the point of the slide touches the surface of the piece the lower edges of the branch rest on the trunnions, the axis of the trunnion is in the same plane with the axis of the bore, if they do not touch the trunnions their axis is above the axis of the piece by half the space between; and if the edges touch the trunnions, and the point of the slide does not touch the surface of the piece, their axis is below the axis of the piece. *The natural line of sight*, when the axis of the gun is horizontal, should be distinctly traced upon the base ring, lock piece, sight masses and swell of the muzzle before leaving the mill. This line serves as a guide to the placing of the sights and also to verify the position of the exterior orifice of the vent. This line should be in the same vertical plane with the axis of the bore, and the Inspector will satisfy himself of this coin-

Digitized by Google

cidence, either by examining the lathe and mode of centering or by actual measurement. This line will be at right angles with the transverse piece of the trunnion square, if the axis of the trunnions be at right angles with the axis of the bore, which must be verified by measuring the distance of each trunnion from the base ring with the *crutch rule.* If the alignment of the trunnions be accurate, the edges of the *trunnion square* will fit on them when applied to different parts of their surfaces. Their diameters and cylindrical form, and the diameters of the rimbases are determined by the *trunnion gauge.*

338. To measure the length of the bore, push the *measuring rod* to the bottom of the bore—apply a straight edge to the face of the muzzle and read the length of the bore off on the rod.

339. The exterior lengths of the gun are measured by the *profile board* marked with the true dimensions.

340. The exterior diameters are measured with the *callipers and square*, or by the *set gauges* used in turning.

341. The interior position of the vent is found by a mark made by the vent gauge on the *on the rammer head* or *profile board* held firmly against the bottom of the bore,—two impressions should be taken. The position of the exterior orifice is also verified.

342. The inclination of the vent with the axis of the bore is found by the *semicircular protractor* and *vent gauge.*

343. The vent is examined by the *vent gauge* and *searcher.*

344. The dimensions of lock pieces and sight masses; the opening of the mouth of the cascable and the diameter of the jaws are verified by the *cascable blocks.*

345. The following variations from the true dimensions may be allowed by the Inspector:

		inches.
In the diameter of the bore -	more - - - - -	0.03
	less - - - - -	0.00
Exterior diameters - -	when turned, more - - -	.05
	when turned, less - - -	.05
	when not turned, more - - -	.20
	when not turned, less - - -	.05
In the length -	of the bore more or less - - - -	.20
	from rear of base ring to face of the muzzle, more or less - - - - - -	.25
	of the cascable, from rear of base ring to the end, more or less - - - - -	.20
	of the reinforce, more or less - - -	.15

Digitized by Google

From the rear of trunnions to rear of base ring, more or less -	.10
In the length of chamber, more or less - - - - -	.10
In the position of the axis of the trunnions, { above axis of the bore - -	.00
{ below axis of the bore - -	.20
In the length of trunnions, more or less - - - -	.05
Diameter of trunnions, less - - - - - -	.05
In the same gun, no variations to be tolerated in the position of the trunnions, or in their alignment.	
In the vent - { diameter more - - - - -	0.025
{ do. less - - - - - -	.000
In lock piece any dimensions—more .1, less - - - -	.00
Variation of position of exterior orifice of vent - - -	.05
Idem of interior - - - do. - - - - - -	.20
Depth of cavities { in the bore or vent - - - - -	.00
{ on exterior surface of reinforces - -	.10
{ elsewhere - - - - -	.25
On trunnions, within one inch of rimbases - - - -	.10
On trunnions, elsewhere - - - - - - -	.25
Enlargement or indentation of bore by proof, not to exceed -	.02

346. The measures are to be taken by scales corresponding with the standard measures of the United States.

347. If two or more cavities should be near each other on the exterior, the gun may be rejected, though the cavities should be of less depth than the allowance in the table.

348. THE PROOF CHARGES shall be as follows:

Nature and weight of gun.		Powder.	Solid shot.	Service junk wads.
10 inch of - - -	10.000 lbs.	18 lbs.	1	1
8 inch of 63 cwt. or -	7.000 "	16 "	1	1
8 inch of 55 cwt. or -	6.000 "	14 "	1	1
64 pdr. of 106 cwt. or -	12.000 "	20 "	2	1
32 pdr. of 61 cwt. or -	6.832 "	16 "	2	1
32 pdr. of 57 cwt. or -	6.400 "	15 "	2	1
32 pdr. of 51 cwt. or -	5.700 "	13 "	2	1
32 pdr. of 46 cwt. or -	5.100 "	12 "	2	1
32 pdr. of 42 cwt. or -	4.700 "	10 "	2	1
32 pdr. of 33 cwt. or -	3.600 "	10 "	1	1
32 pdr. of 27 cwt. or -	3.000 "	9 "	1	1

Digitized by Google

349. To be fired with same charges.

350. All shot for proof shall be cast solid, and when more than one is used they shall be cast together in couples connected by a cylinder.

351. If in any lot of guns proved under the same contract, as many as one gun in every ten shall burst or crack, the whole may be rejected by the Chief of the Bureau of Ordnance and Hydrography.

352. The Inspector shall have power to allow the withdrawal before proof of such guns as are manifestly defective.

353. The number of guns arranged for proof shall be in lots divisible by ten without a remainder—unless a smaller number than ten is required to complete the contract.

POWDER, SHOT AND WADS FOR PROOF.

354. Gun powder used for the proof of cannon shall be of the best quality service cannon powder of not less than 1600 feet initial velocity from the 6 pounder gun pendulum with a charge of ¼ the weight of shot of mean weight and windage.

355. The shot used in the proof of cannon must be of full weight, and not less than the mean, nor above the high gauge.

356. The wads used in the proof of cannon will be cylindrical service wads, of junk, one calibre long—hand made.

357. AFTER THE POWDER PROOF, the searcher is to be introduced, pushed slowly in and out, turning it in the bore at the same time, and thus all parts of the bore are to be thoroughly examined.

358. If one of the points hang, its position is marked on the outside, and the place scrutinized by sounding with a single prong, and taking the impression of the defect in wax.

359. The guns are then to be washed and remeasured at the same points as before proof, and the diameters recorded.

WATER PROOF.

360. The pressure to be applied in the water proof will be two atmospheres, or thirty pounds to the square inch.

361. The penetration of water in this proof through the metal of the piece, in any place, will cause the rejection of the gun, and if on

Digitized by Google

examination, after the water proof, there shall be any defects indicated by weeping or dampness in the bore, the gun shall be rejected.

362. The water proof is alone to be depended on to detect minute clusters of cavities in the bore, which, for this purpose, should be perfectly dry and examined by sunlight. All inspections, consequently, should take place in fair weather, and when the temperature is above the freezing point.

MARKING GUNS.

363. After proof, guns shall be marked with the register number, the initials of the name of the foundry, and the weight in cwts. and parts, on the base ring; with the weight in pounds, on the face of the muzzle; with the calibre and date on the right trunnion; and with the letter P and inspector's initials on the left trunnion. The stamps used in marking shall be one inch in height, except those for the muzzle, which shall be ½ an inch in height.

364. Cannon rejected for imperfections not deemed of a dangerous character, or which receive them accidentally in the course of proof, will be marked thus ⊕C, near the foundry initial. If rejected for defects of metal they will also be marked X. M.; if for dimensions only, which cannot be remedied, X. D.; if from water proof, X. W.; and if from powder proof, X. P. Such as are rejected for defects of a dangerous character, or which receive them accidently, will have one trunnion broken off.

365. The results of the measurements and examinations are to be noted in the inspection report against the number of the gun.

366. After proof, a coat of fish oil is to be given to the guns which pass inspection, to protect them from rust until they are delivered at the Navy Yard. In this operation the Inspector will be careful to have the bores and the interior of the vents perfectly covered with oil.

Digitized by Google

INSPECTION OF SHOT AND SHELLS.

367. Shot and shells shall be made of gray or mottled cold blast iron, soft, and of good quality, and be subject to such tests as may be directed by the Bureau of Ordnance, and specified in the contracts. They must be cast in sand moulds, and be smooth on the surface, spherical in form, and free from the defects named in the following rules for inspection.

368. Shot and shells shall be delivered for inspection at the Navy Yard specified in the contract, and at the expense of the contractor. Those which are rejected shall be immediately removed at his expense.

SHOT.

369. *Inspecting Instruments.*—One *large* and one *small ring gauge* and one *cylinder gauge* for each calibre. The *cylinder gauge* shall have the same diameter as the large gauge, and shall be made of cast iron and not be less than four calibres in length. One *hammer* weighing half a pound and having a flat face and a conical point, one *searcher* of steel wire with a handle, one pair of *callipers* and *standard scale*, one *cold chisel*, steel punches.

370. After having been well cleaned, each shot is placed upon a table and examined to see that its surface is smooth, and that the metal is sound and free from seams, flaws and blisters. If clusters of cavities or small holes appear on the surface, strike the point of the hammer into them, and ascertain their depth with the searcher; if the depth of the cavity exceed 0.2 inch the shot shall be rejected; it shall also be rejected if any attempt is made to conceal defects by plugging or filling holes in any mode whatever.

371. The shot must pass *in every direction* through the large gauge, and *not at all* through the small one; the callipers and scale will determine exactly the difference of diameters of the same projectile.

Digitized by Google

372. The ring and cylinder gauges shall be examined before each inspection, and when found to have enlarged 0.01 of an inch, must be laid aside and marked as unserviceable.

373. The shot are next to be passed through the *cylinder gauge*, which is to be placed at an inclination of about two inches between the ends and supported in such a manner as to be easily turned from time to time to prevent its being worn in furrows. Shot which slide or stick in the cylinder shall be *rejected;* the latter must be pushed out from the lower end of the cylinder with a wooden rammer.

374. The next proof of shot, is to drop them from a height of twenty feet on a solid platform of iron, or roll them down an inclined plane of the same height against a mass of iron; after which they are again examined for defects of metal.

375. The average weight of shot shall be determined by weighing at least three parcels of from 20 to 50 each, taken indiscriminately from the lot. As many of the lightest shall be weighed separately as the Inspecting Officer may deem necessary, and all found to fall below the least weight allowed in the annexed table of the dimensions of shot and shells shall be rejected.

SHELLS AND HOLLOW SHOT.

376. *Inspecting Instruments.*—In addition to the instruments for shot, there will be required *callipers with steel points* for measuring the thickness of the shell at points on the great circle at right angles with the axis of the fuze hole, *gauges* for the thickness at and opposite the fuze hole; a *conical flat steel gauge* for the fuze hole, marked at the point to which it should enter; a pair of *strong hand bellows*, with a wooden plug to fit the fuze hole and the nozzle air-tight.

INSPECTION.

377. The surface of the shell and its exterior dimensions, form, weight and strength are to be examined and tested as in the case of shot, and subjected to all the conditions there specified except dropping.

Digitized by Google

378. The shell is next struck with a hammer, to judge by the ring or sound whether it is free from cracks, and the exterior and interior diameters of the fuze hole, (which should be accurately reamed,) are to be verified, and the soundness of the metal about the inside of the fuze hole to be ascertained. To determine the thickness of the metal, three points, at least, on the great circle at right angles to the axis of the fuze hole are to be measured, also one at the fuze hole and one at the bottom. No shell shall be received which deviates more than five-hundredths of an inch from the proper thickness in any part.

379. The shell is next placed in a tub of water, which should be deep enough to cover the shell nearly to the fuze hole. Air is then forced by the bellows into the shell. If there are any holes in it air bubbles will rise on the surface of the water and the shell shall be rejected.

380. This occasionally occurs from the escape of air from porous spots which do not extend to the interior of the shells. In this case the action of the bellows produces no increase of bubbles, which cease rising as soon as the spots or cavities are filled with water. Porous spots are also detected by their absorbing water and drying slowly when exposed to the air, and shall likewise cause the rejection of the shell.

381. Rejected shells are to be mutilated by chipping a piece out at the fuze hole.

WINDAGE.

382. Experience having shown that the minimum windage may be safely reduced to 0.1 inch, and the mean windage always exceeding it considerably in practice, the gauges for foundries have been accordingly altered.

383. The practice in the foundry at the Washington Yard having shown that the difference between the high and low gauges for all calibres may be conveniently reduced to 0.04 inches, that standard has been adopted for shot of the 1st class.

Digitized by Google

SHOT AND SHELLS.

Dimensions, weight, &c.

SHOT.

CALIBRE.	10 Inch.	8 Inch.	32 pdr.
Proper diameter, . . . inches	9.88	7.88	6.28
Diameter of large gauge, . . . "	9.90	7.90	6.30
Diameter of small gauge, for foundries,	9.86	7.86	6.26
Diameter of small gauge, for service,	9.84	7.84	6.24
Mean weight, ... lbs.	130.	65.	32.5
Least weight allowed, . . . "	128.	64.	32.

SHELLS.

CALIBRE.	10 Inch.	8 Inch.	32 pdr.
Proper diameter, . . . inches	9.88	7.88	6.28
Diameter of large gauge, ...	9.90	7.90	6.30
do. do. for strapped shells,	9.93	7.93	6.33
Diameter of small gauge for foundries, .	9.86	7.86	6.26
Diameter of small gauge for service, .	9.84	7.84	6.24
Thickness of metal. Proper, ...	2.00	1.50	1.25
Thickness of metal. Greatest, ...	2.05	1.55	1.30
Thickness of metal. Least, ...	1.95	1.45	1.20
Diameter of fuze hole. Proper and least . . .	0.50	0.50	0.50
Diameter of fuze hole. Greatest, ...	0.52	0.52	0.52
Mean weight, ... lbs.	102.	49.5	25.
Least weight allowed, . . . "	100.	49.	24.5

384. If upon the inspection of guns, or other articles, any of them should be found not to conform strictly to these instructions or to the requirements of the contract under which they are offered for reception, the Inspecting Officer is not to receive them; but, if in his opinion, the defects taken in connection with the general character of the articles, will not impair their efficacy or render them unsafe or haz-

Digitized by Google

ardous, he may refer to the chief of the Bureau of Ordnance and Hydrography for his decision, fowarding to him minute and full information on the subject.

4

MANUFACTURE AND INSPECTION OF GUNPOWDER.

The following extracts from the Ordnance Manual of the Army are adopted for the Navy.

1st. The saltpetre should be refined so as to contain not more than 1.300 of foreign salt, and it should be prepared either by fusion or crystallization in minute crystals, so as to deprive it of water.

2nd. The charcoal should be prepared by distillation from young willow, poplar or other light wood; it should not be perfectly black, but exhibit a reddish hue.

3rd. The proportions should be,

Saltpetre - - - -	75 to 76
Charcoal - - - -	15 to 14
Sulphur - - - -	10

4th. The incorporation should be made in "cylinder mills," under heavy rollers, the coal and sulphur having been pulverized previously to being mixed with the saltpetre. A charge of 50 lbs. of composition may be incorporated by rollers of about 5 tons weight, running three hours; the time may, no doubt, be diminished if the rollers are heavier.

5th. No other pressure than that of the rollers is required for forming the cake, but the use of the press is not prohibited.

6th. The grains should be angular, and their size be determined by seives made by piercing round holes in thin plates of brass. These seives are six in number, the holes are of the following diameters, viz:—

No. 1	.12 of an inch,
No. 2	.10 " " "
No. 3	.09 " " "
No. 4	.06 " " "
No. 5	.05 " " "
No. 6	.035 " "

Digitized by Google

The first three are marked "For Cannon powder," the last three "For Small Arms."

7th. Cannon powder when sifted should not leave more than ten per cent. on No. one; not more than five per cent. should pass through No. three, and of the remainder about one half, but not more, should pass through No. two. Ten grains troy of this powder contain about sixty-five kernels. Cannon powder should have a density of about 875 oz. and not exceeding 900 oz., to the cubic foot.

8th. "Powder for small arms," or "Musket powder" should all pass through No. four, about one half through No. five, and nearly one fourth through number six, averaging from 2000 to 2500 kernels in ten grains troy.

All the powder should be well glazed, that for small arms more highly than that for cannon.

PROOF BY THE MORTAR EPROUVETTE.

"The powder in each barrel is proved. For this purpose a sample of about three and a half ounces is taken from each; this is conveniently done by means of an *extractor*, which is a copper tube about one inch interior diameter, and eighteen inches long, pointed at the bottom, and having a valve at the lower end, or an opening nine inches from that end, by covering which with the hand the powder may be poured out of the mouth of the tube; the sample is poured into a tin canister marked with a number, a corresponding one to which is inscribed with chalk on the barrel; from these samples, the charges for the eprouvette are weighed on the proving-ground, as they are required.

The platform for the mortar eprouvette should be a block of oak timber established on a foundation of masonry, with which it is connected by strong bolts; to this block the iron bed-plate is fixed by the three bolts provided for that purpose, the plate being also let into the wood about 1.5 inch, to avoid bending the bolts. The ground where the balls are to fall should be free from stones and not too hard.

The eprouvettes are provided with 3 service balls and a standard ball, (marked No. 1,) by means of which, and of the standard powder accompanying each eprouvette, the mortar and the service-balls should be verified from time to time.

Digitized by Google

The eprouvette, being washed clean and dried by firing a scaling-charge, is placed in its bed, in a vertical position, in which it is supported by a wedge or prop; the vent is stopped with a copper wire having a shoulder to prevent it from projecting into the chamber, and the charge of powder is introduced through a long funnel which is supported on the bottom of the bore, at the mouth of the chamber; the ball is then carefully lowered down by means of a hook, and the mortar placed on its bed, care being taken not to jar it roughly; it is primed with a small strand of quick match, and fired without delay. Two charges are fired in this way from each sample of powder, and if the ranges differ more than twenty yards, a third charge is fired, and the two nearest ranges are used in obtaining the mean range. The mortar is scraped and wiped after each discharge, and it is washed and dried, as at first, after about eight shots.

The general mean range of new powder proved at any one time must be not less than 250 yards; but no powder ranging below 225 yards is received. The powder in magazines is considered unserviceable if it does not range 180 yards.

With the eprouvettes well adjusted, good cannon powder ranges from 280 to 300 yards, and small grain powder from 300 to 320 yards.

Inspection Report—The report of inspection should show the place and date of fabrication and of proof—the kind of powder and its general qualities; as hard or soft, round or angular, whether free from dust or not, of uniform or irregular grain,—its gravimetric density—the separate ranges and the mean range—the condition of the mortar and the ball—the state of the weather.

REMARKS.

Although the above is the established mode of proof and inspection for Government powder, it cannot be disguised that a very imperfect test of the relative projectile force of gunpowder is thereby afforded. Slight variations in the density of powder which would but little affect its strength, when fired in large quantities produce great difference in the proof range; and variations in the size of the grain cause still greater irregularities in the range, the powder being in other respects the same. In general, gunpowder of *small grain* and *low specific gravity* gives the highest range in the eprouvette, whilst recent experiments with the ballistic pendulum have shown that the

Digitized by Google

greatest initial velocity, in a shot from a heavy gun, is produced by powder of *great specific gravity* and of *coarse grain*.

PENDULUM EPROUVETTE.—The best mode of testing the projectile force of gunpowder is undoubtedly that of ascertaining its effects used in the same quantities in which it is to be employed in service. This method has been partially adopted by establishing at Washington Arsenal a 6 pdr. cannon pendulum and a musket pendulum, which are used for proving samples of powder sent from the manufactories. The apparatus shows the initial velocity of a ball fired from a cannon or a musket.

In proving cannon powder, the initial velocity of a ball of medium weight and windage, with a charge of *one-fourth* its weight of powder should be:

From a 24 pounder garrison gun not less than 1,600 feet.

From a 12 pounder field gun not less than 1,550 feet.

From a 6 pounder field gun not less than 1,500 feet.

In proving small arm powder the initial velocity of a musket ball, with a charge of 120 grains should be:

With musket powder not less than 1,500 feet.

With rifle powder not less than 1,600 feet.

With fine sporting powder not less than 1,800 feet.

A ballistic and gun pendulum will be soon erected in the Navy Yard at Washington, by which powder will be tested as occasion may require, to ascertain the strength of such as may be furnished by contract, and of that which may have been long on hand. The tests by the mortar eprouvette although imperfect are to be continued until otherwise directed, and if practicable, the powder tested must be compared with other of known good quality.

1st. Samples of the powder should be taken occasionally and subjected to a proximate analysis, to test the accuracy of the proportions.

2nd. The saltpetre obtained in analyzing the powder should be tested to see that it has the requisite purity.

3rd. Samples of the powder should be occasionally subjected to the Hygrometric test, by exposure from fifteen to twenty days in a moist place, in connection with a sample of powder of approved good quality by way of comparison.

4th. The size of the grains should be tested by the regulation sieves.

Digitized by Google

5th. The cleanness of the powder should be tried by flashing a small quantity, and comparing it with other powder known to be good.

6th. The gravimetric density should be tried. The standard powder measures of the Navy, which are marked with their cubic contents, are convenient for this purpose.

7th. If an Ordnance Officer is to be present at the powder mill during the execution of the contract, or if one can visit the works frequently, samples for proof may be taken as the powder is packed. Otherwise one barrel in ten taken at random should be opened and examined, a sample taken for proof, and the whole ten marked with the initial velocity obtained by the pendulum. The quantity thus taken from the barrels should be replaced.

The powder must be packed in well seasoned and substantial white oak casks, of such dimensions that with one hundred pounds of powder in each, a space of two inches will be left between the powder and the head of the cask when standing on end. The casks must be well hooped, as the contract may require, and be in all respects to the satisfaction of the Inspecting Officers. The place of proof shall be designated by the Chief of the Bureau of Ordnance. No proof of cannon powder shall be commenced with less than lots of 100 barrels, unless otherwise determined by the Bureau.

Tabulated returns of proof and other tests applied by the Inspecting Officer shall be made to the Bureau of Ordnance, and the report of the proof-marks put upon the barrels.

Before leaving the manufactory, the barrels shall be marked with the name thereof, date of fabrication, and kind of grain, in black. After proof, the proof-marks are to be put on the other head, in red, thus:

The marks of the manufactory, ...	On one head, in black.
Year of fabrication, ...	
C. P. for cannon powder, or M. P. for musket powder,	
Proved, (18 —) . . .	On the other head, in red.
Initial velocity in feet, . .	
Initials of Inspector's name, .	

Digitized by Google

PREPARATION, PRESERVATION, AND DISTRIBUTION OF

ORDNANCE STORES AT NAVY YARDS.

385. All articles of Ordnance and Ordnance Stores, or for Hydrographical purposes, when duly delivered at any Navy Yard, are like all other public Stores in the Yard to be borne on the books of the Navy Store-keeper, and duly accounted for by him according to such regulations as may from time to time be established by proper authority.

386. Whenever Assistant Inspectors of Ordnance shall be ordered for duty at any Navy Yard, the *immediate* custody and charge of all articles appertaining to Ordnance and Hydrography is to be transferred to the Senior of the Assistants, and kept in suitable places separate from other articles in the Yard.

387. For all articles so placed in charge of the Assistant Inspectors of Ordnance, the Navy Store-keeper is to take receipts from the Inspectors, to exonerate him from, and to impose upon them the responsibility for the articles.

388. Whenever any of these articles shall be furnished to vessels, or for any other purpose by the Ordnance Officer, he is to take proper receipts for them from the Officer to whom they are delivered, which should express that the articles are received from the Navy Store-keeper by the hands of the Ordnance Officer. These receipts are to be delivered to the Navy Store-keeper as vouchers for expending the articles on his books, and will operate as credits in favor of the Ordnance Officer to the same extent on his books.

389. Assistant Inspectors of Ordnance having charge of the articles above mentioned, are under the direction of Commandant of the Yard to be responsible for their being carefully attended to, and as far as possible preserved from injury.

390. When any of them shall require repairs, the Assistant Inspector will apply to the Commandant of the Yard or to the Bureau for the necessary means to keep all articles in his charge in order and ready for service.

Digitized by Google

391. Officers upon Ordnance duty at Navy Yards may correspond directly with the Bureau on subjects connected with Ordnance and Hydrographical duties, forwarding their communications in all cases open to the Commandant of the Yard for transmission.

392. The Commandants will in forwarding such communications, accompany them with the remarks or recommendations which they may deem proper, and at any other time make such suggestions as they may consider will promote the public interests.

393. The allowances which are prescribed for the different classes of vessels in the table of allowances are not to be exceeded except by the express sanction of the Chief of the Bureau of Ordnance, or of the Secretary of the Navy.

PRESERVATION OF GUNS.

394. Guns received at navy yards are to be carefully placed on the ranges of masonry, capped with iron skids or bolts, which have been or will be provided for that purpose. It is intended that these shall be so high that the guns may be rolled upon them without their trunnions touching the ground, and that the earth will not be beaten up against their muzzles by heavy rains.

395. The surface over which guns are to be stowed, should be kept firm and clear of all vegetation; and for this purpose should be covered with cinders from the Smiths' forges, or other substance unfavorable or destructive to plants and grasses.

396. In stowing the guns they should be made to rest on one of the skids or bolts, a little forward of the base-ring, the muzzle depressed, but not so much as to prevent the use of the sponge to clean out the gun; the axis of the trunnion of each to be inclined the same way, and just enough not to touch the adjoining gun; the vents to be upwards.

397. Before the stowage is finally made they should be carefully and thoroughly cleaned from rust and all improper coatings; and be lackered internally and externally with such composition as may be directed by the Bureau. This should be applied when practicable, at times when the guns are well warmed by the rays of the sun. The vents and all screw holes are to be stopped with plugs made of soft wood, or oakum dipped in tallow, after they shall have been protected

Digitized by Google

by an application of beeswax dissolved in spirits of wine or other composition that may be directed by the Bureau.

398. No tompions are to be put into the guns when they are stowed, unless expressly directed by the Bureau; if so ordered, a score must be cut out from them on the lower side, half an inch wide and equally deep.

399. In lackering guns care is to be taken to leave the distinguishing marks and numbers distinctly visible.

400. Guns of the same calibre and class, when it can be conveniently done, are to be stowed in the same tier or range, and those of each class belonging to or selected for any particular vessel, kept together. The tier or range having a particular calibre or class stowed upon it, is to be marked accordingly with white paint, and the first gun of each class belonging to a vessel, is to be marked with the name of the vessel.

401. The officers on ordnance duty will examine all the guns in the yard and on board vessels in ordinary, at least once in every two weeks, and take care that they are kept protected from rust, or any injury from defective arrangement or stowage; and will report to the Bureau whenever any additional precautions or arrangements are required for their proper preservation, and which may not be furnished by the order of the Commandant of the yard.

402. No cutting, boring, or chiseling of guns is to be done at any time without the express authority of the Bureau.

403. No condemnation of guns or small arms belonging to the navy is to be made, except upon surveys specially ordered and confirmed by the Chief of the Bureau, nor of other articles which have been furnished under his authority or by his direction, unless by surveys ordered or sanctioned by him.

404. When guns and their equipments are to be put on board vessels for their armament, the guns are to be carefully and thoroughly cleaned and examined to see that they are in all respects in proper serviceable condition.

The vents should be examined with the vent-guages and searchers to see that they are clear from any substance which may obstruct the use of priming-wires and primers.

405. The carriages are also to be carefully examined, the trunnion-holes and arms of the axletrees cleaned and saturated with boiled lin-

Digitized by Google

seed oil, the cracks filled with putty and rubbed smooth, and the trunnion-holes black leaded. The iron work should be freed from rust, all screws be made to work easily, be well cleaned and properly coated with proper composition.

406. The Ordnance Officers will see that the sights are properly fitted and marked for their proper guns, and that the beds and quoins are fitted and adjusted, and the quoins graduated to degrees to correspond with those marked on the sight-bars.

407. When guns are to be shipped for *transportation* merely, the same precautions are to be taken to guard them from injury as on shore, with the addition of a wad dipped into the composition which covers the bore, thrust into the muzzle and connected with the tompion by a laniard.

408. At the termination of a cruise, the guns composing the battery of every vessel of war of the United States shall be carefully examined by the Ordnance Officer of the Yard and such others as may be directed, with the view to discover and report any injuries which they may have sustained in service, or any defects which may not have been developed in the original proof. In this examination the attention of the Inspecting Officers is to be directed to the following points, viz:

Indentations or hollows produced by the shot *ballotting* against the surface of the bore.

Cuts or *scratches* in the bore produced by fragments of broken, or the roughness of imperfect shot.

Roughness or corrosion of the metal on the exterior produced by neglect or exposure.

Similar injuries in the bore; or any enlargement of the bore produced by them, which is to be ascertained by the star-guage, and the results recorded in the usual form that they may be compared with those noted at the original inspection.

Care is to be taken that the distinguishing marks and numbers are always accurately noted, that the correct history of each gun may be preserved.

As the best indication of the amount of firing to which any gun has been exposed, when it is not otherwise known, is given by the enlargement of the vent, particular attention will be paid in the reinspection of guns, to this point. The standard gauge will be used to ascertain the general enlargement, and the searcher, to detect defects

Digitized by Google

which may have been developed in firing. Impressions are to be taken of the lower orifice of the vent with softened wax, and if they show that the vent is corroded in furrows and enlarged considerably in diameter at its junction with the bore, a permanent impression is to be taken in lead to show the conical enlargement. The manner practiced at the experimental battery at Washington is recommended.

IMPLEMENTS REQUIRED.

1. *A copper wire*, rather larger than the vent.
2. *A lever* about twice the length of the bore.
3. *A small button of lead* judged to be of sufficient size to fill the vent at least one inch from the bore. This is to be pierced lengthwise to receive the wire.

TO TAKE THE IMPRESSION.

"Shove the wire into the vent, let it pass along the bore and out at the muzzle; put it through the leaden button and tie a knot at the end. Draw the wire back through the vent until the leaden button is felt to have taken firmly into the inner orifice.

Apply the lever, making its end bear on on the button, and force it well in. This done, disengage the button by pushing in the wire."

PRESERVATION OF SHOT AND EMPTY SHELLS.

409. All round shot and shell are to be cleaned from rust and covered with a thin lacker of such composition as may be directed by the Bureau, when they are first received and when they are restowed.

Empty shells are to have the fuze-bouching coated with such composition as may be directed, and unless otherwise ordered, be stopped by a plug of very soft wood, well coated with a mixture of oil and tallow, screwed into them.

They are to be piled with the fuze holes down, aud free from contact; under cover when practicable, but with free ventilation.

410. Platforms of masonry, or of condemned shot are to be prepared to pile shot and shells upon, and are not to be wider if space can be found, than to stow fourteen 32 pdr. shot; or not exceeding eight feet in width. Square piles are to be preferred where there is room, but where this may be deficient, the piles may be extended in length.

Digitized by Google

411. Shot and shells, after having been piled, are to be so far examined in the first week of June, in each year, as to ascertain if they require to be cleaned, relackered, and repiled to secure their proper preservation; and their condition reported to the Bureau, that if any work upon them is necessary, it may be finished during the warm months of the year, when the lacker can be best applied.

412. Whenever shot or shells are to receive lacker, care must be taken that the quantity applied does not increase the diameter more than is indispensably necessary, and in no case above the established high gauge. Old lacker and rust should be removed by scraping as far as can be conveniently done, before a new coating is applied. Neither hammering nor heating is to be used for this purpose.

413. Shot which have been, or may hereafter be classed according to "full size," or which do not exceed .18 of an inch windage, are to be entirely black, and those of "medium size" or having from .18 to .25 of an inch windage to be marked partly white. Each class is to be piled and kept separate from each other and from all others. Both are to be considered and supplied as "serviceable shot," but the returns to the Bureau are to show the number of each respectively. The number of those having more than .25 of an inch windage are to be reported and retained until special orders may be given for the disposition to be made of them. In case any should be taken as the foundation for piling serviceable shot, they are to be painted entirely white and their number returned.

Piling of Balls.

414. *To Find the number of balls in a pile.*—Multiply the sum of the three parallel edges by one third of the number of balls in a *triangular face.*

415. In a *square pile* one of the parallel edges contains but one ball; in a *triangular pile* two of the edges have but one ball in each. The number of balls in a triangular face is $\frac{n(n+1)}{2}$; n being the number in the bottom row. The sum of the three parallel edges in a triangular pile is $n + 2$; in a square pile $2n + 1$; in an oblong pile $3\,N + 2n - 2$; N being the length of the top row, and n the width of the bottom tier; or $3\,m - n + 1$; m being the length, n the width of the bottom tier.

Digitized by Google

416. If a pile consists of two piles joined at a right angle, calculate the contents of one as a common oblong pile, and of the other as a pile of which the three parallel sides are equal.

417. When the length of the bottom tier does not exceed 21, the number of balls in any pile may be found by the following table, in which the second line shows the number of balls in a triangular pile, the base of which is the number in the same column in the top line. The other numbers show the contents of square and oblong piles, the bases of which are in the top line and the left hand column respectively.

16

Digitized by Google

TABLE OF THE NUMBER OF BALLS IN ANY PILE, THE BASE OF WHICH DOES NOT EXCEED TWENTY-ONE BALLS.

	2	3	4	5	6	7	8	9	10	11	12	13	14	15	16	17	18	19	20	21
Tri.	4	10	20	35	56	84	120	165	220	286	364	455	560	680	816	969	1140	1330	1540	1771
2	5																			
3	8	14																		
4	11	20	30																	
5	14	26	40	55																
6	17	32	50	70	91															
7	20	38	60	85	112	140														
8	23	44	70	100	133	168	204													
9	26	50	80	115	154	196	240	285												
10	29	56	90	130	175	224	276	330	385											
11	32	62	100	145	196	252	312	375	440	506										
12	35	68	110	160	217	280	348	420	495	572	650									
13	38	74	120	175	238	308	384	465	550	638	728	819								
14	41	80	130	190	259	336	420	510	605	704	806	910	1015							
15	44	86	140	205	280	364	456	555	660	770	884	1001	1120	1240						
16	47	92	150	220	301	392	492	600	715	836	962	1092	1225	1360	1496					
17	50	98	160	235	322	420	528	645	770	902	1040	1183	1330	1480	1632	1785				
18	53	104	170	250	343	448	564	690	825	968	1118	1274	1435	1600	1768	1938	2109			
19	56	110	180	265	364	476	600	735	880	1034	1196	1365	1540	1720	1904	2091	2280	2470		
20	59	116	190	280	385	504	636	780	935	1100	1274	1456	1645	1840	2040	2244	2451	2660	2870	
21	62	122	200	295	406	532	672	825	990	1166	1352	1547	1750	1960	2176	2397	2622	2850	3080	3311

Digitized by Google

FILLED SHELLS.

418. The fuzes for shells will be prepared at the laboratory in the navy yard at Washington, and distributed to other yards as they may be required.

419. The charges of powder for *shells* are to be as follows:

10 inch.	8 inch.	32pdr.	Boat and field howitzer.	
			24pdr.	12pdr.
Lbs.	Lbs.	Lbs.	Lbs.	Lbs.
Service charge, 3.25 Blowing charge, 0.25	1.85 0.25	0.90 0.25	1.0	0.5

420. The number of shells to be kept fitted at the navy yards will be determined by special directions from the Bureau.

421. Loaded shells are to be marked with red, and placed in boxes marked with a Red Cross. They are to be stowed in "shell houses" prepared for that purpose.

422. These buildings, and the general condition of the shells, are to be examined as often as once a fortnight by the Ordnance Officer, and every precaution taken to keep them as dry as possible.

423. Equal proportions of five, ten, and fifteen-second fuzes, whether spare or in fitted shells are to be supplied to vessels, unless otherwise directed.

424. The threads of all the screws connected with the fuzing of shells are always to be lightly coated with the lacker for small arms, or such composition, as may be directed, to secure their more easy extraction.

425. If it should be deemed expedient to examine the fuzes and loading of shells which have been already prepared, great care must be observed in removing the fuze.

426. The fuze-stock may generally be safely unscrewed with the fuze-wrench, taking care in the first place to strike the sides of the shell gently to detach the powder from the fuze, to work very slowly, and not to endeavor to overcome any unusual resistance.

427. In emptying shells, they are to be handled carefully, and placed on a bench with a hole to receive and support the inverted shell. A wooden vessel placed below will receive the powder. Should

Digitized by Google

the powder have become caked, so as not to be easily removed from the shell, it is to be drowned and removed by washing out the shell.

428. The *shells* for boat guns are to be stowed in "the shell houses" on shore, and "shell rooms" on board vessels, in their proper boxes.

Digitized by Google

PRESERVATION AND DISTRIBUTION

OF

GUNPOWDER.

429. The powder magazines are to be inspected by the ordnance Officers at least once in every two weeks, and every precaution taken to guard them against danger of explosion, and to preserve the powder dry and in good condition.

430. The powder barrels in the magazines should be turned, and the condition of the barrels attended to, as often as once in two months. The stowage should be so arranged, that the oldest powder may be accessible for first delivery without disturbing that of more recent manufacture.

431. When cartridges are filled for issue to any vessel, the powder should be selected, as far as practicable, from deliveries made by the same person, and at the same time or date; and the tanks in which they are stowed are to be marked with white paint on their upper sides, with the same marks as the barrels from which the powder was taken, giving the date of manufacture and the maker's name.

432. Whenever powder shall be returned into the magazines from vessels, and the powder is emptied from the cartridges, care must be taken to have the barrels or other vessels in which the powder may be placed, marked in the same manner, so that the maker's name and date of manufacture of all powder may be correctly known.

433. The names of vessels from which powder is received—the length of time which the powder has been on board, and the station on which the vessel has been employed should also be noted, and reported by the Ordnance Officer, that reference may be had to the notes in case it should be desired in subsequent examinations of the powder.

434. When powder is handled in magazines on shore, either for the purpose of inspection or preparation for delivery to ships, the baize floor-cloth is to be spread, and the people before entering the

Digitized by Google

magazine, are to divest themselves of every metal implement, and empty their pockets, that nothing likely to produce fire may escape detection, and to put on the magazine slippers. The barrels must be opened only on the floor-cloth, and no metallic setter must be used in connexion with either copper or wooden hoops.

435. When avoidable, gunpowder is not to be sent from vessels to magazines, nor from magazines to vessels in wet weather, nor when there is a probability of wetting the barrels or cases; and the packages should, on shore, be conveyed in covered conveyances, showing a small red flag.

436. The wharf or landing place should be spread with old canvass, so that the barrels or cases may not come in contact with, and convey sand or gravel to the magazine.

437. The red flag is always to be hoisted at the magazines when they are opened.

438. *The service charges* for the different calibres and classes of guns which are now used in the navy are to be as follows, and the cartridges are to be filled accordingly, viz:

Ordnance.		Powder charges.			Dimensions of cartridge formers.
Calibre.	Weight.	For distant firing.	For ordinary firing.	For two projectiles.	
64 pdr.	106 cwt.	16 lbs.	12 lbs.	8 lbs.	7.00 inches.
32 "	61 "	10	8	6	5.5
32 "	57 "	9	8	6	5.5
32 "	51 "	8	7	5	5.5
32 "	46 "	7	7	5	5.5
(a) 32 "	42 "	6	6	4	5.5
(a) 32 "	33 "	4½	4½	4	5.5
(a) 32 "	27 "	4	4	3	5.5
Shell guns.				For near firing.	
10 inch.	89 "	10	9	8	6.00
8 "	63 "	9	7	6	5.5
8 "	55 "	7	7	6	5.5

(a) Two projectiles are not to be fired from these guns at the same time, except at objects within 200 yards distance, and only when the advantages at the moment may be deemed sufficient to justify the risk of injuring the guns and their equipments by the extra strain to which they will be exposed.

Solid shot are not to be fired from shell guns.

Digitized by Google

439. That the kind of charges in each powder-tank may be known by the exterior of the tanks, the fronts of the tanks are to be painted wholly or in part of the color of the cartridge-bags they contain; that is, "*White*" for *distant firing* charges—"*Blue*" for *ordinary* charges, and "*Red*" for *near firing* charges. The *calibre* and *class* of guns for which the cartridges are intended are to be distinctly marked near the top of the front of the tanks.

440. The charges for "*Boat and Field Howitzers*," are—

	lbs.
For the 24 pdr. of 1310 lbs., . . .	2.00
Medium 12 pdr. of 760 lbs., . .	1.00
Light 12 pdr. of 430 " . .	0.625

441. Cartridges for boat howitzers are to be stowed in the magazine, where they can be readily passed up, and the tanks are to be properly marked "Boat Howitzer."

The cartridges for small arms are to contain the following quantities of powder:—

For Muskets, . . .	100 grains Troy
" Carbines, . . .	60 " "
" Pistols, . . .	30 " "

442. The ball cartridges for carbines and pistols are to be made with a single ball. One-half of those for muskets are to have three buck-shot in addition to the ball; the other half with a single ball.

443. Percussion caps and bullets for small arms will be supplied from the Navy Yard at Washington.

444. The boxes in which cartridges for small arms are packed for distribution to vessels are to be marked with the number they contain, and the kind of arm for which they are intended, and at the expiration of the cruise are to be carefully returned into store.

445. *Powder measures* for filling cartridges will be made at the Navy Yard, Washington, and distributed as they may be required for the use of vessels and shore magazines. They will be marked with the weight of powder which they will contain, and will be cylindrical, and of the folowing interior diameters, viz:

For 64 pdr. shot guns, ... 7 inches.

Digitized by Google

For 10 inch shell guns with 42 pdr. cylindrical chambers, 6 inches.
For 8 inch shell guns with 32 pdr. cylindrical chambers, 5.5 "
For all 32 pounder shot guns, ... 5.5 "

These diameters are the same as are prescribed for the cartridges of the respective guns, and will consequently always form standard gauges with which the cartridge formers may be compared and verified.

CANNON PRIMERS.

446. Each primer is composed of a quill *tube* capped by an explosive *wafer*. The quills are inspected and each one passed through a gauge rather smaller than the vent before they are used to make the primers.

The *tube* is filled with fine grained powder.

The *wafer* is composed of a cap of cartridge paper, enclosing a layer of fulminate of mercury combined with a small quantity of mealed powder. When pressed and perfectly dry, the wafer is coated with uncolored shellac, to preserve it from dampness.

Primers are to be kept in *tin boxes* containing fifty each, the lids of which are luted with shellac, to exclude moisture, until wanted for immediate use. These boxes are intended to fit in and form a lining to the *primer-box*, fitted to slip on the *waist belts* worn by Captains of guns. No more of these tin boxes should be opened than an immediate supply for the purposes of exercise requires; but for action, a full box should be delivered to each Captain and 2d Captain of a gun.

Filled boxes of primers are kept in close laboratory cases, for which stowage must be provided in the general store room of the ship, or other safe place. They are "*on no account to be placed in the magazine*," and the boxes are to be so labelled before being put on board ship.

When *primers* have been returned from cruizing ships, or have remained in store for one or more years, they are to be reported and not to be issued again without special orders.

447. SPUR TUBES are composed of a quill *tube* containing a mixture of mealed powder and spirits of wine, and the *spur* which contains the quick-match by which it is ignited. The *spur* is attached at a right angle to the tube, near the top. A small cap of lacquered pasteboard

Digitized by Google

which is to be removed before firing, is fitted on the end of the spur to protect the match from moisture.

Spur tubes are intended for use, should the lock be out of order, or the primers fail from any unforeseen cause.

Spur tubes are packed in tin boxes in the same manner as primers. Ordinary quill tubes may be made and used in the absence of all better means.

448. PERCUSSION CAPS for muskets, carbines and pistols are made in the laboratory at the Washington Navy Yard. They are put up in small packages of water proof paper, labelled with the number contained in the package and the date of the fabrication, and stowed in tin cases containing 350 caps each.

LABORATORY BOXES in which these are packed, are of the following dimensions:—11⅛ × 8⅜ × 6¼ inches, and will contain 6,300 percussion caps, each. These boxes are to be labelled "*on no account to be put in the magazine.*" Stowage is provided for them in the general store room.

17

Digitized by Google

NOMENCLATURE AND DESCRIPTION OF NAVAL ORDNANCE.

449. The principal divisions or parts of a piece of Naval Ordnance may be enumerated and classed as follows: See parts of guns and cannon.

The *Cascable*, A L, is that part of the gun behind the base ring, and in general terms, *includes the knob*, *the neck* and the *base of the breech*; but as the forms, and consequently the nomenclature, of the subdivisions of the cascable as well as of other parts of the gun vary in guns of different construction, these minor details are given in the diagrams and the explanation.

The base of the breech, A J, is a spherical or spheroidal segment in rear of the breech between the *base ring* and the *fillet*, or commencement of the neck.

The base ring, A, is a projecting band of metal adjoining the base of the breech, and with few exceptions, is connected with the body of the gun by a concave moulding called the *curve of the base ring*.

The breech, *a* J, is the mass of solid metal behind the bottom of the bore, extending to the base of the breech.

In all U. S. Naval guns of recent construction, there are two reinforces, designated respectively, as the 1st and 2d reinforces.

The 1st reinforce, B C, is the cylindrical part of the gun in front of the base ring, and is the thickest part of the body of the gun in front of that ring.

The 2d reinforce, C E, is the truncated cone in front of the 1st reinforce, and extending to the chase, to which it is connected by a concave moulding, E F, called the *curve of the reinforce*.

The chase, F G, is the conical part of the gun in front of the 2d reinforce, and is bounded towards the muzzle by a ring, G, called the *chase ring*.

The muzzle is that part of the gun comprised between the chase ring, G, and the face of the piece, I. In a few shell guns the form of the muzzle is cylindrical, (fig. I, G I) in which case the gun is called "*straight muzzled*;" since 1845, however, all guns excepting the boat and

Digitized by Google

field howitzers, have been cast with "*tulip muzzles*," the parts of which are composed of the *neck*, the *swell*, the *fillet*, the *lip* and the *face*.

The *neck* is the narrowest part of the gun in front of the chase ring. The *swell*, H, the largest part of the gun in front of the neck; and the *fillet* and *lip*, the cylindrical and concave mouldings which terminate the swell.

The *face*, *e*, is the terminating plane, perpendicular to the axis of the bore.

The *trunnions*, D, are cylinders, the axes of which are in a line perpendicular to the axis of the bore, and in the same plane with that axis.

The *rimbases*, Q O, (section at the trunnion,) are short cylinders uniting the trunnions with the body of the gun. The ends of the rimbases are planes perpendicular to the axis of the trunnions.

The *bore* of the piece, *a e* Fig. 1, includes all the part bored out, viz: the cylinder *b e* the chamber *a c* and the conical or spherical surface, *c b*, connecting them. The chamber in 32 pdrs, of 27 cwt., shell guns, howitzers, and mortars, is the smaller part of the bore, which contains the charge of powder. In the two former, the chamber is cylindrical, and is united with the large cylinder by a conical surface called the *slope*, *c b*.

The howitzers for boat service, have conical chambers joined to the cylinder of the bore by a portion of a spherical surface; these are called *Gomer chambers*.

The mouth of the bore of all guns is chamfered slightly, in order to prevent abrasion.

In shell guns of the models described by Fig. 1, the bore at the mouth of the piece is bevelled conically; this part of the bore *d e*, is then called the *flash rim or cup*.

The *bottom of the bore*, *a*, is the interior termination of the bore. In the shell guns represented by Fig. I, it is a plane united with the sides, in profile, by an arc of a circle, the radius of which is one fourth of the diameter of the bore at the bottom. In the guns modelled according to the construction proposed by Commodore Wadsworth in 1845, the bottom of the bore is eliptical.—See Figs. 3, 4 and 5.

The *axis* of the bore is coincident with the axis of the piece.

Digitized by Google

The *length* of the gun, A I, is the distance from the rear of the base ring to the face of the muzzle. The rear of the base ring is to be understood as the point from which all measures of length are to be taken.

The axis of the *vent*, V, is in a plane passing through the axis of the bore perpendicularly to the axis of the trunnions. In shell guns and cannon the vent is inclined to the axis of the bore from 9° to 11°.

The *lock piece* is a block of metal at the outer opening of the vent, to which the lock is attached.

The *breech sight mass* is a block of metal on the base of the breech just in rear of the base ring, and forms a support to the box in which the breech sight is made to slide.

The *reinforce sight mass* is a block of metal on the 2d reinforce, just in front of the axis of the trunnions, and forms a base to which the reinforce sight is screwed.

The 64 pounder cannon of 105 cwt., has a *ratchett* (R fig. 5) on the base of the breech, extending from the base ring in a line through the neck and the knob, entirely across the base of the breech, and is divided into notches to receive the pawl and elevating lever, by means of which the breech is supported and the elevation altered.

A plane passing through the axis of the piece at right-angles to the axis of the trunnions should intersect and divide equally the lock piece,* the breech and reinforce sight masses, and the ratchett if there be one.

*NOTE.—Except in the *new* 8 inch shell guns of 63 cwt. which has two lock lugs, one on each side of the vent, at equal distances from it.

Digitized by Google

SHELL GUNS

Fig 1.

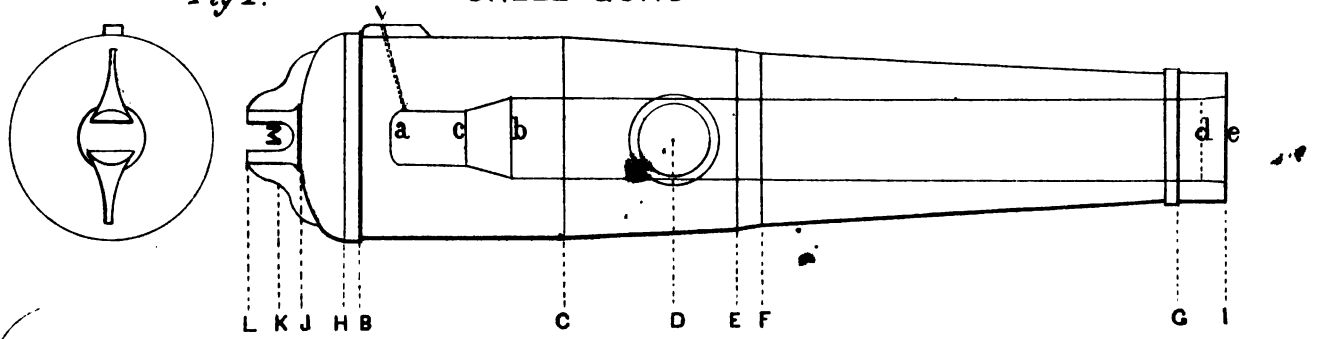

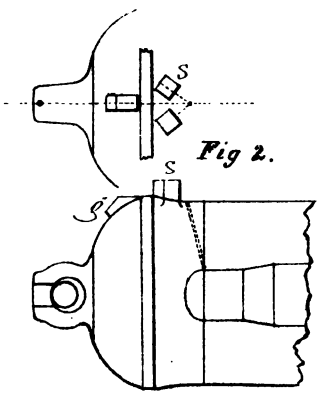

Fig 2.

Fig 3.

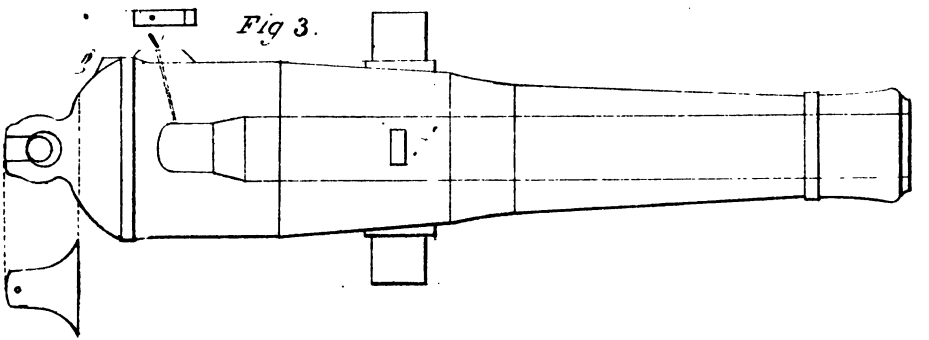

Stellwagen

Digitized by Google

Digitized by Google

SECTION
at the
TRUNNION.

Q O P

Fig 4.

CANNON

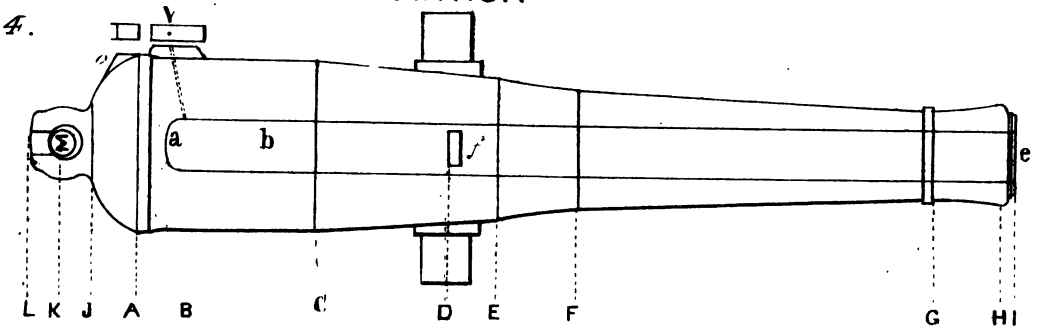

Fig 5.

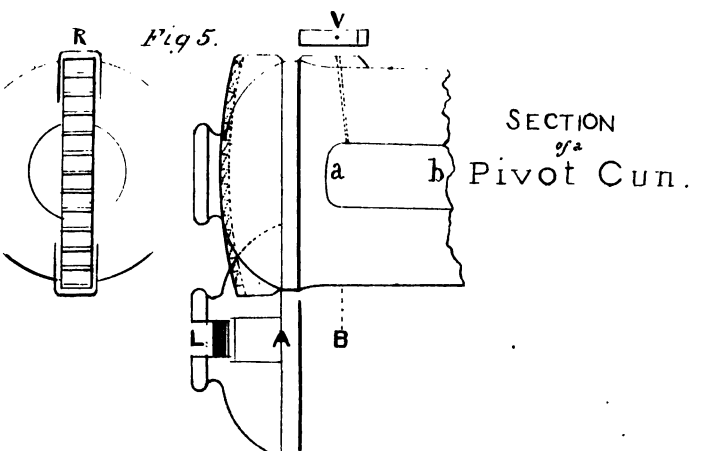

SECTION
of a
Pivot Gun.

Digitized by Google

Digitized by Google

Digitized by Google

		Date.	Form.	Length.	Weight.	LENGTHS OF												
				Ft. In.	Cwt.	AB.	AC.	AD.	AE.	AF.	AG.	AH.	AI.	AJ.	AK.	AL.	A.	B.
				′ ″		″	″	″	″	″	″	″	″	″	″	″	″	″
Shell Guns,	10 Inch	1841	Fig. 1	9.4	86	2.	28.	42.	50.	53	106.	—	112	5.	8.2	12.	26.25	25.5
	8 "	1841	" 1	8.10	63	2.	20.5	40.5	45.	47	102.	—	106	5.50	8.	11.50	22.6	22.
	8 "	1851	Fig. 3*a*	"	63	8.	21.2	35.59	45.1	53.	94.	104.3	106	6.01	9.66	13.31	24.04	23.25
	8 "	1846	"	8.4	55	4.6	20.	35.07	41.8	50.	88.4	98.1	100	5.70	10.25	14.15	23.2	22.4
Cannon.	64 Pdr.	1849	Fig. 4*b*	10.10	105	7.50	26.	45.56	53.56	65.	117.25	128.2	130	6.95	—	10.95	28.2	27.
	32 "	1846	" 4	9.4	57	6.35	22.40	39.53	45.9	56.	101.81	110.05	112	5.59	9.715	13.34	22.36	21.56
	32 "	1846	" 4	9.	51	6.30	21.60	38.32	44.7	54.	98.02	106.5	108	5.38	9.48	13.08	21.52	20.72
	32 "	1846	" 4	8.6	46	7.	20.40	36.	42.40	51.	92.08	100.5	102	5.44	9.94	13.69	21.28	20.48
	No. 1 32 "	1842	" 1*c*	8.	42	5.50	20.	38.	45.	52.	92.	—	96	3.	5.75	9.	20.5	19.2
	" 2*d* 32 "	1843	" 1*d*	"	42	5.50	20.	38.	45.	52.	90.	94.50	96	3.	5.75	9.	20.5	19.2
	" 3*e* 32 "	1845	"	"	42	5.50	20.	38.	45.	52.	90.	94.50	96	3.	6.50	10.	20.5	19.2
	" 4 32 "	1847	" 1*c*	"	42	6.20	19.20	34.05	40.45	48.	86.25	94.50	96	5.15	8.90	12.40	20.6	19.8
	No. 1 32 "	1846	"	6.7	32	5.80	15.80	28.1	34.5	39.5	69.4	77.5	79	5.08	9.08	12.83	20.	19.2
	" 2 32 "	1846	"	"	32	5.80	15.80	28.1	34.5	39.5	69.4	77.5	79	5.	8.50	12.	20.	19.2
	No. 1 32 "	1844	" 1*d*	6.	27	4.	19.	25.	32.5	35.	66.	70.50	72	4.5	6.50	9.6	18.4	17.6
	" 2 32 "	1846	" 4	"	27	6.40	14.40	25.50	31.4	36.	62.6	70.50	72	4.55	8.05	11.55	19.2	18.4
	" 3 32 "	1846	" 4	"	27	5.60	14.40	25.50	31.4	36.	62.6	70.50	72	4.55	8.05	11.55	19.2	18.4

a, Fig. 2, shows the arrangement of *lock lugs* in this gun.

b, Fig. 5, represents the breech and ratchetts of this gun.

c, Form like fig. 1, but not chambered.

d, Form the same as No. 1 of the 42-cwt. class, but has *a tulip muzzle.*

e, Cascable and muzzle like Fig. 4, in other respects like No. 2 of the 42-cwt. class.

Digitized by Google

DIAMETERS AT										TRUNNIONS.				BORE AND CHAMBER.						
										Length.	Span of Rimbase.	Diameter at		Lengths of				Diameters at		
C.	E.	F.	G.	H.	I.	J.	K.	L.	M.	OP.	QO.	P.	O.	ae.	ac.	cb.	de.	b.	c.	e.
//	//	//	//	//	//	//	//	//	//	//	//	//	//							
25.5	23.	22.	16.	—	16.	8.50	—	7.	3.60	7.	25.5	9.	11.	106.	9.5	5.5	3.	10.	7.	10.25
22.	20.5	19.5	13.4	—	13.4	7.20	—	6.3	3.30	6.50	22.2	7.018	8.518	102.	7.45	5.	4.	8.	6.40	8.50
23.25	19.78	17.16	12.4	14.	11.	12.02	8.6	6.8	3.30	6.	23.25	7.	9.	100.3	7.45	4.	—	8.	6.40	—
22.4	19.45	17.	12.85	14.	11.60	12.	8.50	7.	3.30	6.50	22.4	7.	9.	95.4	7.	4.	—	8.	6.40	—
27.	23.3	19.9	14.25	16.2	12.75	13.9	12.	—	—	8.	27.	8.	10.	124.2	—	—	—	8.	—	—
21.56	18.50	15.88	11.25	12.8	10.19	11.18	8.25	6.50	3.25	6.	21.56	6.40	8.40	107.9	—	—	—	6.40	—	—
20.72	17.9	15.40	11.10	12.70	9.98	10.76	8.	6.20	3.20	6.	20.72	6.40	8.40	104.	—	—	—	6.40	—	—
20.48	17.5	15.20	11.	12.50	9.92	10.88	8.	6.50	3.	6.	20.48	6.40	8.40	97.20	—	—	—	6.40	—	—
19.2	17.	15.	11.50	—	11.50	7.	—	6.	3.	5.50	19.20	6.40	8.40	90.50	—	—	3.	6.40	—	6.65
19.2	17.	15.	11.50	13.	11.	7.	—	6.	3.	5.50	19.20	6.40	8.40	90.50	—	—	1.50	6.40	—	6.65
19.2	17.	15.	11.50	13.	11.	7.	7.	5.50	3.	5.50	19.20	6.40	8.40	90.50	—	—	1.50	6.40	—	6.65
19.8	17.1	14.8	10.80	12.3	9.75	10.30	7.60	6.	3.	5.50	19.80	6.40	8.40	92.05	—	—	—	6.40	—	—
19.2	16.3	14.4	10.80	12.	9.60	10.16	7.50	6.	3.	5.50	19.20	6.40	8.40	75.04	—	—	—	6.40	—	—
19.2	16.3	14.4	10.80	12.	9.60	10.	7.60	6.	3.	5.50	19.20	6.40	8.40	75.10	—	—	—	6.40	—	—
17.6	15.8	14.8	10.5	11.60	9.60	8.50	—	5.50	3.	5.	17.60	5.82	7.40	70.	6.	2.50	1.50	6.40	5.82	6.65
18.4	15.8	13.9	10.7	11.8	9.40	8.	7.30	6.	3.	5.	18.40	5.82	7.82	67.65	5.	2.50	—	6.40	5.82	—
18.4	15.76	13.9	10.57	11.4	9.40	.	7.30	6.	3.	5.	18.40	5.82	7.90	68.40	5.40	2.50	—	6.40	5.82	—

N. B. The principal dimensions of the Boat Howitzers are given in page 22 of the "system of Boat armament," by Lieut. J. A. Dahlgren.

Digitized by Google

Digitized by Google

MEAN RANGES OF U. S. NAVAL ORDNANCE,

SINGLE SHOTTED, WITH THE CHARGES FOR DISTANT FIRING.

Class of Gun.	32 Pdrs.				8 Inch Shell Guns.	
	27 cwt.	33 cwt.	42 cwt.	57 cwt.	55 cwt.	63 cwt.
Charges.	4 lbs.	4½ lbs.	6 lbs.	9 lbs.	7 lbs.	9 lbs.
Height above water.	7 feet.	7½ feet.	8⅓ feet.	9 feet.	7½ feet.	9 feet.
P B, or level.	250 yds.	287 yds.	313 yds.	360 yds.	283 yds.	330 yds.
1°	545	581	672	760	579	660
2°	800	857	988	1150	869	970
3°	1047	1140	1274	1440	1148	1260
4°	1278	1398	1505	1710	1413	1540
5°	1469	1598	1756	1930	1657	1770
6°	1637	1812*		2140	1866*	

*Not marked on sights, as the muzzle swell interferes.

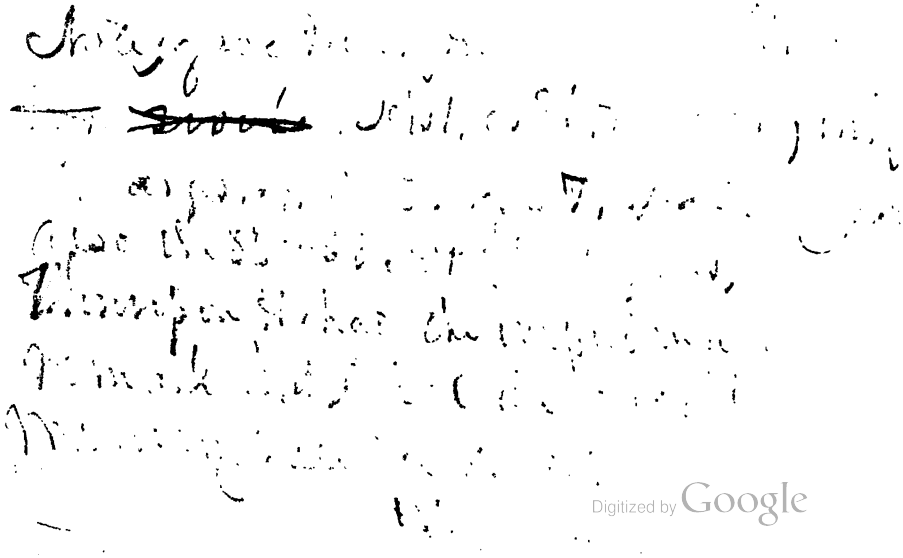

Digitized by Google

NAVAL GUN CARRIAGES.

450. The 10 inch shell guns and the 64 pdr. shot gun are only used upon the spar or upper decks of vessels, and are mounted on *pivot carriages*, which admit of greater elevation than the dimensions of ports will allow. These carriages are formed of two parts, viz:—the brackets and their connections, which are fitted to work upon a slide. The slide is secured by a pivot bolt at one of its ends, upon which it is traversed to bring the gun to bear upon an object, or to change its position for firing.

451. *Pook's Friction Carriage* has been used to some extent in vessels carrying 32 pdr. guns of 27 and 33 cwt., with a view of controlling their recoil. The use of this carriage is merely experimental to ascertain its relative merits as compared with other carriages.

452. Another carriage intended also for these light guns—the Hardy carriage—fitted with the compressing apparatus proposed by Commander Van Brunt, has been used to some extent to test the comparative merits of the two systems.

453. The ordinary naval truck carriage is, however, that which may be considered as the established carriage for broadside guns of ships of war. The parts of these carriages are more particularly explained by the nomenclature and the accompanying plates.

All gun carriages and their equipments are to be made in conformity with directions from the Bureau of Ordnance and Hydrography.

NOMENCLATURE.

(454.) ORDINARY NAVAL TRUCK CARRIAGE.

WOODEN PARTS.

Carriage.

A { Brackets of large carriages are made each of two pieces joined by a jog (*a*), and dowelled. The remaining parts of the brackets are the trunnion holes (*b*), steps (*c*), quarter rounds (*d*), and arch (*e*.)

Digitized by Google

NAVAL TRUCK CARRIAGE

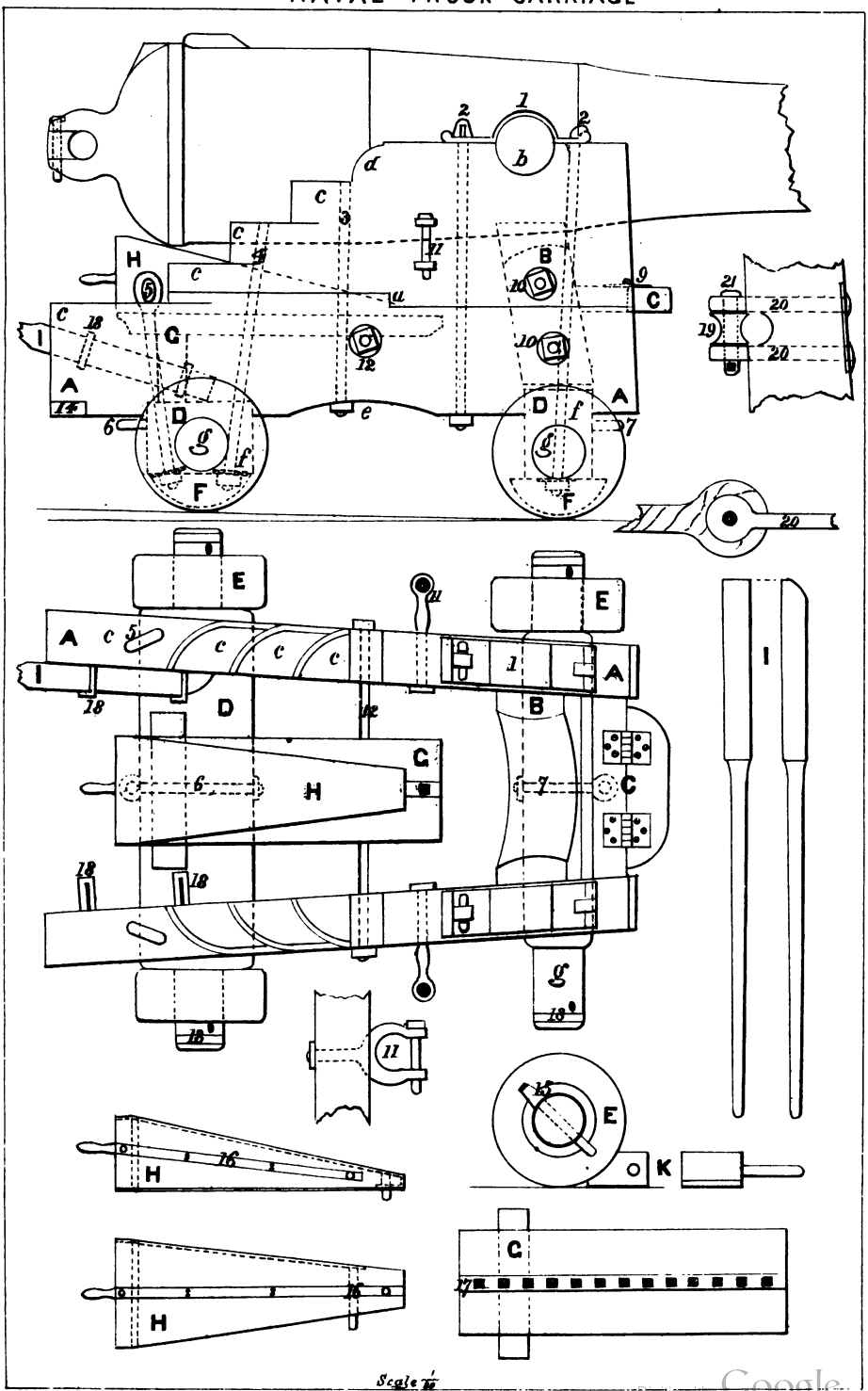

Digitized by Google

Digitized by Google

B. Transom.
C. Breast piece in two parts, the inner part fixed, the outer part moveable, connected by hinges.
D. Front and rear axle-trees consisting each of square body, *(f)*, and arms, (*g.*)
E. Front and rear trucks.
F. Dumb trucks.
G. Bed and stool.
H. Quoin.

Implements.

I. Handspikes.
K. Chocking quoin.

METAL PARTS.

Carriage.

1. Two capsquares.
2. Four capsquare bolts and two keys.
3. Two bracket bolts.
4. Two rear axle-tree-bolts.
5. Two side tackle eye-bolts.
6. One train tackle eye-bolt.
7. One transporting eye-bolt.
8. Breast bolts.
9. Two hinges of breast pieces.
10. Two transom bolts (upper and lower.)
11. Two breeching shackles and pins.
12. Bed bolt.
13. Four axle-tree bands.
14. Two chafing plates.
15. Four linch-pins and washers.
16. Quoin plate and stop.
17. Ratchett for quoin stop.
18. Four training loops.
19. Breeching thimble, (cast iron.)
20. Side shackle bolts for breechings.
21. Shackle pin, plates and keys.

(455.) POOK'S FRICTION CARRIAGE.

Wooden parts.

A { Brackets of large carriages are made of three pieces each, the two upper joined by a jog (*a*), and dowels. The remaining parts of the brackets are as follows, viz :—Trunnion hole, (*b.*) Steps, (*c.*) Quarter rounds, (*d.*)

B { Transoms, breast, middle, and rear, tenoned into brackets. When fitted with a quoin, as in the drawing, the middle and rear transoms are joined.

C. Trucks front, rear, and training, bouched; the training trucks fitted to be removed at pleasure, so that the carriage may run off from the slide.

D. Quoin.

E. The slide composed of two pieces with a slot between for a part of their length.

Digitized by Google

Metal Parts.

1. Capsquares (two.)
2. Capsquare bolts (eight,) and keys (four.)
3. Bracket bolts (four.)
4. Side tackle eyes (two.)
5. Train tackle eye and ratchett-plate for quoin stop.
6. Journal plates for rear and training trucks; pins and nuts.
7. Transom bolts (four.)
8. Linch pins and washers.
9. Quoin plate and stop.
10. Eccentric shaft and axle.
11. Eccentric Journal boxes.
12. Compressor boxes.
13. Compressor levers and keys, stop-pins and plates.
14. Compressor plates terminating in nose plate with hole for pivot bolt.
15. Pivot bolt, loop and socket.
16. Guide plate and slot.

(456.) HARDY CARRIAGE, FITTED WITH VAN BRUNT'S COMPRESSOR.

Wooden Parts.

A. Brackets, jog, *(a)* trunnion holes, *(b)* steps, *(c)* quarter round, *(d.)*
B. Front, rear and middle transoms.
C. Trucks.
D. Supports.
E. Slide.
F. Bed.

Metal Parts.

1. Capsquares (two.)
2. Capsquare bolts (four,) and keys (four.)
3. Bracket bolts (four.)
4. Side-tackle eyes (two.)
5. Train-tackle eye and plate for elevating screw.
6. Journal plates for trucks; pins and nuts.
7. Transom bolts (three.)

Digitized by Google

POOK'S FRICTION CARRIAGE

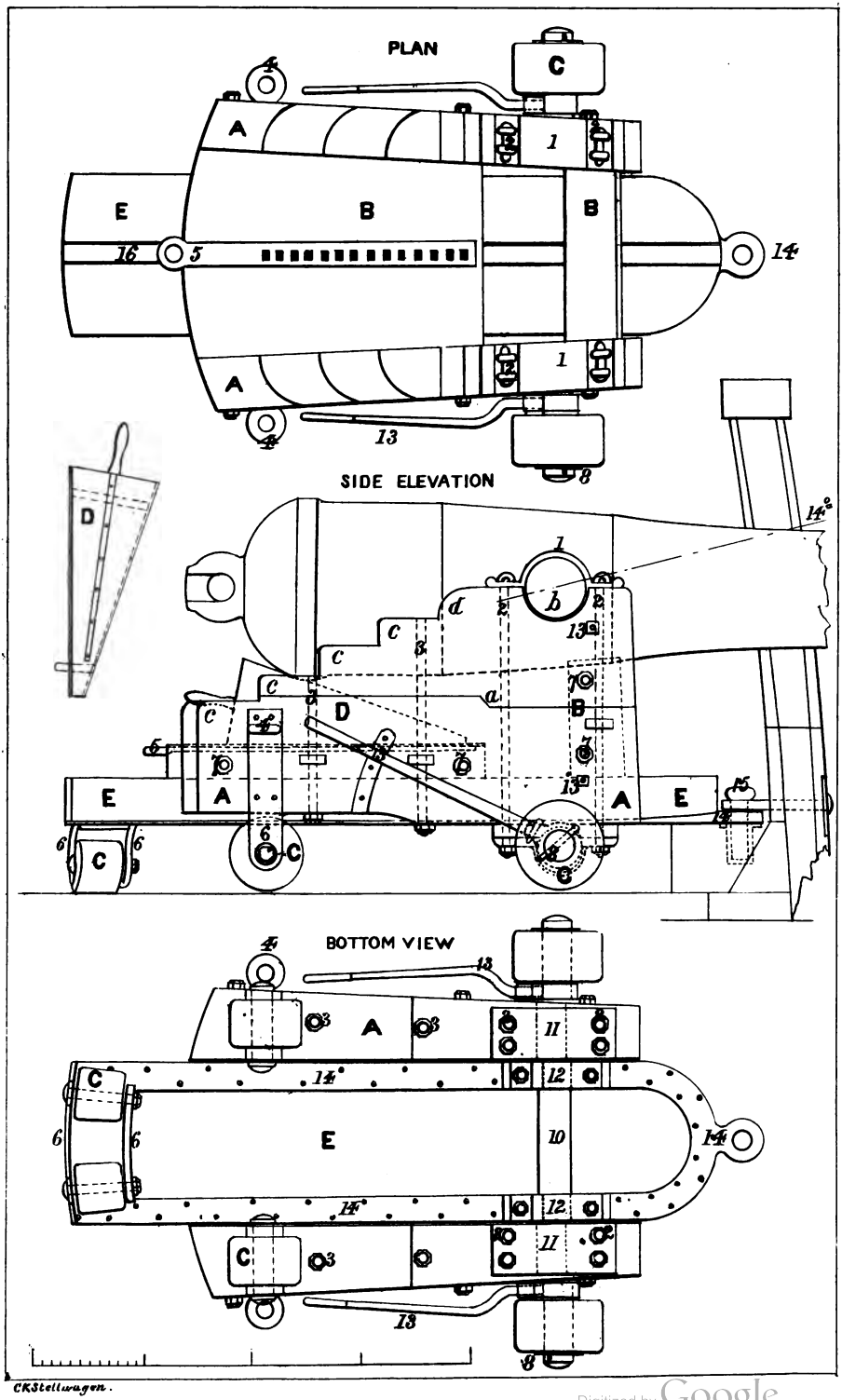

CKStellwagen.

Digitized by Google

Digitized by Google

VANBRUNT'S FRICTION CARRIAGE

SIDE ELEVATION

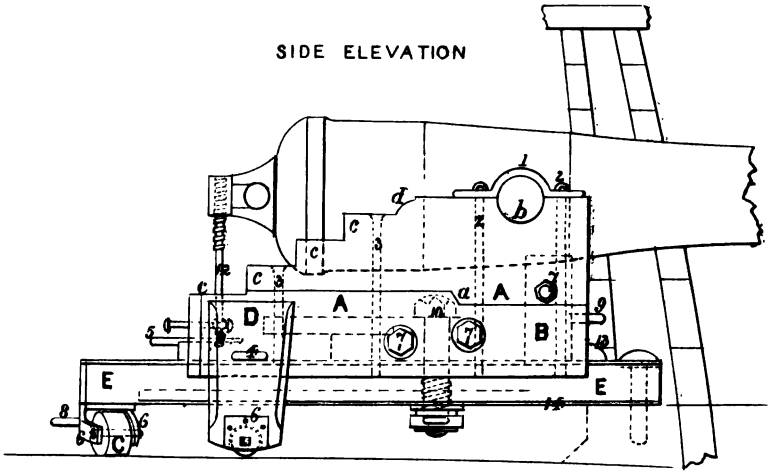

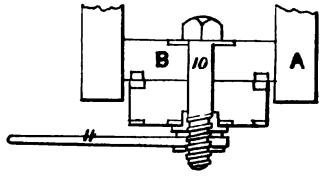

PLAN

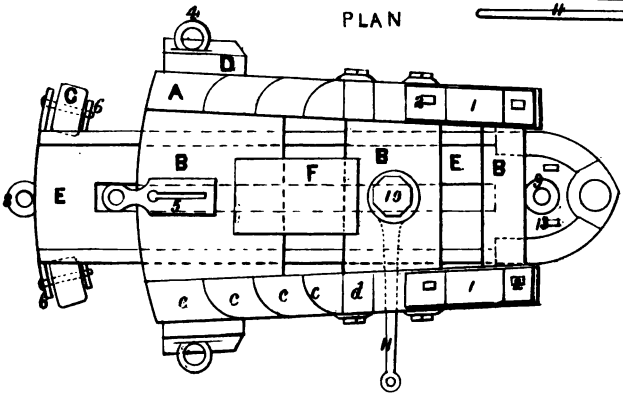

Scale
1 inch = 1 foot

FRONT

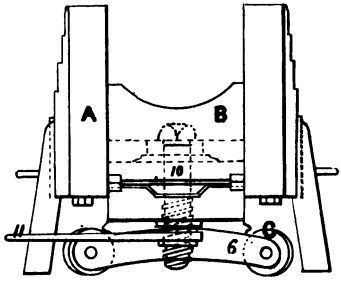

REAR

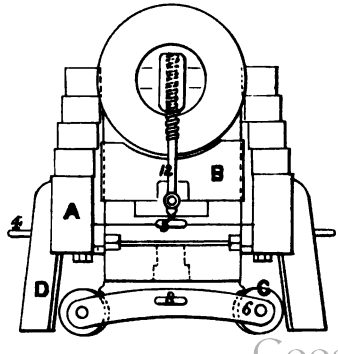

Digitized by Google

Stollwagen.

Digitized by Google

8. Rear transporting eye-bolt.
9. Front transporting eye-bolt.
10. Compressor.
11. Compressor-lever.
12. Elevating-screw.
13. Stops (two.)
14. Nose-plate.

(457.) TRAVERSING PIVOT GUN CARRIAGE AND SLIDE.

WOODEN PARTS.

Carriage.

A { Brackets are each made of two pieces joined by a jog *(a)* and dowelled. The remaining parts of the brackets are as follows, viz: Trunnion holes *(b,)* steps *(c,)* quarter rounds *(d.)*

B { Transoms, breast, tenoned and bevelled, *(e,)* for elevation and depression, front, middle, and rear, transoms are jogged into the brackets. The front and middle transoms are joined. Guide battens *(g.)*

Slide.

C. Rails jogged into transoms, slats *(f)* between them.

D { Transoms, front, middle and rear. The front and rear composed each, of two pieces.

E. Hurters forward and after—the after one moveable, with dowels.
F. Training trucks, (two.)
G. Transporting trucks (four.)
H. Shifting chock and dowels.

METAL PARTS.

Carriage.

1. Capsquares (two.)
2. Capsquare bolts and keys (four.)
3. Bracket bolts and nuts (eight.)
4. Side tackle eyes (eight.)
5. Journal plates for front and rear axles (eight.)
6. Breast transom bolts and nuts (two.)
7. Eccentric shaft and axle (two) front and rear.
8. Rollers, front and rear (four.)
9. Eccentric axles for compressors (two.)

Digitized by Google

10. Levers, elevating, front, rear and compressor (seven.)
11. Journal boxes for compressors (four.)
12. Compressors (two) generally fitted with screws.
13. Breeching bolts (two.)
14. Elevator, pawl, wedge and screw.
15. Guide plates on carriage and slide in side rails; too small to be represented in their places between the battens and rails.

Metal Parts.

Slide.

16. Rail plates (four) fastened with wood screws.
17. Compressor plates (two) under flange of rail.
18. Pivot plates, forward and after, upper and lower.
19. Pivot bolts and socket. Sometimes the pivot bolts are fixed in the deck, in which case the slide is fitted with a moveable flap.
20. Friction plates.
21. Deck circles.
22. Eccentric axles for training trucks.
23. Journal boxes for do. do.
24. Transporting axles with eyes for tackles.
25. Side tackle eyes.
26. Training tackle eyes.

Digitized by Google

TRAVERSING PIVOT GUN-CARRIAGE, SLIDE, &c.

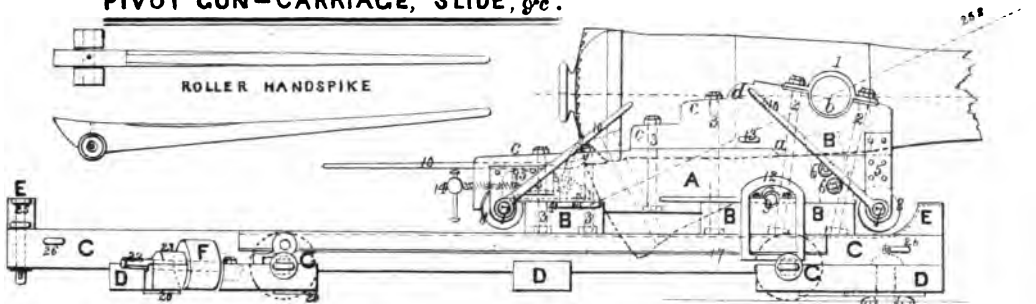

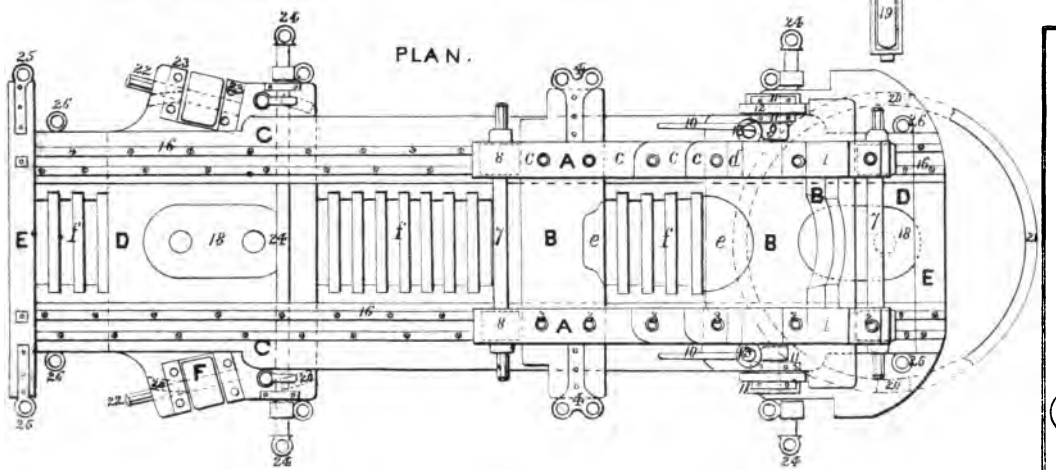

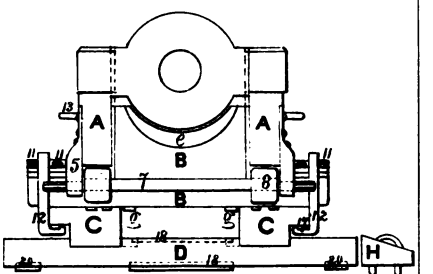

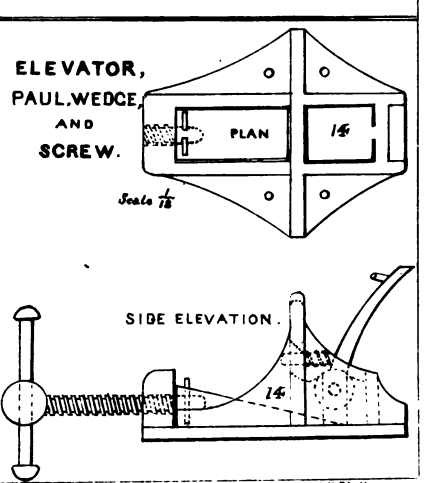

Digitized by Google

Digitized by Google

GUN GEER AND IMPLEMENTS.

458. BREECHINGS for all guns are to be made of the best hemp, of three-stranded rope, shroud-laid and soft, and not to measure less than eight ~~and a half nor more than nine inches in the coil.~~

The lengths of breechings are to be such, that the muzzle of the gun when run in and levelled, shall, when the breadth of the vessel will allow it, be one foot inside of a line perpendicular to the upper edge of the inside of the port.

The thimbles ~~are~~ to be spliced into the breeching, the ends stuck through twice, marled down, well parcelled, and served. Breechings are not to be covered; nor is blacking of any kind, which may harden or stiffen them, to be put on either breechings or tackle-falls.

459. TACKLE-FALLS, should correspond in quality with the breechings and be very pliable. For all guns of 60 cwt. and upwards mounted on truck carriages, they should be of 3 inch rope, for those between 40 and 60 cwt., of 2½ inch rope, and for lighter guns 2¼ inch. Tackle-falls for friction carriages may be reduced to 2½ inches for guns above 60 cwt., and to 2¼ inches for those below that weight. Their length to be regulated by the guns.

460. BLOCKS for gun tackles, should have pins of hardened copper turned smooth, sheaves of lignum vitæ without bouching. Those to reeve 3 inch falls to be 11 inches, those for 2½ inch falls 10 inches, and those for 2¼ inch falls 8 inches long.

TRUNNION SIGHT.

461. The *trunnion sight* is designed to be used only when the required elevation passes the limits of the other sights. It is formed of a bar of mahogany or other hard wood not liable to warp, of about eighteen inches in length, two inches wide and one inch thick, with a brass notch at the rear end and a point at the other, fixed in and parallel to the upper edge. It is attached by a stout thumb-screw to the axis of the left trunnion, around which it revolves when the screw is slack.

Digitized by Google

The face of the trunnion is graduated into degrees, so that the sight may be used with the tables shewing the corresponding ranges of the several classes of guns with their distant firing charge.

The upper edge of the sight bar corresponds with 0° when the line of sight is parallel to the axis of the bore.

In using this sight the thumbscrew is first loosened and the sight directed at the object, in which position it is held until the desired elevation is given to the gun, when it is screwed fast again.

RAMMERS.

462. RAMMER-HEADS are to be made of well seasoned ash, birch, beech, or other tough wood, and for 8 inch shell guns and 32 pounder cannon, of the form and dimensions given in the drawing furnished by the Bureau to the different Navy Yards. The face of the rammer is hollowed, so as to embrace the front of the ball and press the selvagee wad home in its place. A hole is bored lengthwise *through* the head, to admit the tenon, which is fastened by a pin of hard wood, three-tenths of an inch in diameter, passing transversely through the head and tenon. The diameter of the staff is 1.75 and that of the tenon 1.5 inch. The diameter of the rammer-head will be 0.25 inch less than that of the bore or chamber to which it is adapted.

For all chambered guns the rammers will be adapted to the chamber, but as above described, will answer equally well for the shot and selvagee wad.

Staves are made of tough ash, and are one foot longer than the bores of the guns for which they are intended.

SPONGES.

463. SPONGE-HEADS are to be made of poplar, white pine or other light wood. A hole 1.5 inch in diameter is bored through the axis to admit the tenon of the staff, into which the worm is previously secured by means of a brass pin which passes through an eye in its shank and the tenon. The worm is intended to project half an inch beyond the face of the sponge head when the tenon is in place, and to have free play back into its socket when pressed against the bottom of the bore.

Digitized by Google

The worm should be two inches in length and one and a quarter inches in diameter, and should be made of elastic brass or composition wire 0.2 inch in diameter and tapering at the points so as to preserve its elasticity and firmness.

All heads for woolen sponges are to be 8 inches long, and one inch less in diameter than the bore or chamber to which they are adapted, and are secured to the staff by two pins of hard wood 0.3 inch in diameter.

The wood of which sponge heads are made should be well seasoned and should be gotten out of a size but little greater than the diameter of the heads for which it is intended, so that there may be as little shrinkage as possible in the finished heads.

The heads when finished should also be primed with several coats of boiled linseed oil or varnish, as the porous wood of which they are made is apt to become water-soaked.

For chambered guns the woolen and the wire sponges are adapted to the chambers, excepting two woolen sponges for each deck adapted to the bore.

The bristle sponges are adapted to the bore.

The staves are made of tough ash 1.75 inch in diameter, and are 18 inches longer than the bores of the guns for which they are intended.

464. Woolen sponges are made of coarse woolen yarn woven into a warp of strong hemp after the manner of a Brussels carpet. The loops, which are 0.75 inch long, are afterwards cut and sheared. They are woven in webs with selvage intervals between them, which being cut in the middle are sewed to fit formers of the same dimensions as the sponge heads, a circular piece of the same material forming the bottom.

In covering the sponge heads, the points of the worm should be worked through the bottom, and the selvage gathered with sewing twine and secured to the inner end of the head by six copper nails. Two copper nails are also used to secure the bottom.

Similar sponges are readily made on board ship by thrumming canvass bags with woolen thrums provided for that purpose.

Sponges may likewise be made of sheep skin, alum dressed, with the wool on; but they are considered inferior to and more expensive

Digitized by Google

than those made of yarn, and are not to be supplied when woven sponges can be obtained.

465. SPONGE-CAPS are made of duck, and except for spar deck guns, when they are exposed to the weather, should not be painted, but they, as well as the staves should be kept clean by scrubbing.

466. SPONGES should be carefully dried after use before putting the caps on, and frequently examined and dried to prevent their rotting.

467. THE BRISTLE SPONGE consists of an ordinary sponge head covered with bristles instead of wool, intervals being left on the cylindrical part. The bristles project ¾ of an inch beyond the surface of the wood. As it is much used in washing the gun, it is to be strengthened by a copper band on the inner end. The windage of the finished implement is one-tenth of an inch.

468. THE WIRE SPONGE consists of an ordinary sponge head covered with wire card leather, such as is used in the manufacture of cotton and wool. On the cylindrical part, intervals are left between the strips of card leather for the fragments of the burnt cartridges to fall into. Windage one-tenth of an inch.

WORMS.

469. THE WORM consists of a screw of two turns at the end of a cylindrical iron shank one inch in diameter, with a socket and straps riveted to the staff, which is 1.5 inch in diameter. The worm is supported in the axis of the bore by means of a guide-ring of composition kept in place on the shank six inches from the end by a shoulder and forelock.

Thus adjusted, it is used to draw the junk wad and cartridge, the latter being laid hold of by the tie, is uninjured.

When the ring is removed, the worm will be equally efficient in drawing the selvagee wad.

LADLES.

470. LADLES when required, are to be made according to the new patterns sent to each of the Navy Yards. Ladles which may be on hand are to be tried in drawing projectiles from the guns before they are issued for service.

Digitized by Google

HANDSPIKES.

471. Handspikes will be made of well seasoned hickory, and unless otherwise directed in particular cases, are not to be shod. Care is to be taken in the equipment of guns to ascertain that the handspikes all ship properly in the *training loops* of the carriage.

PASSING BOXES.

472. The passing boxes for guns upon gun decks where the shot and shell guns are of such weight that all are intended to use the same charges, will be painted black.

If any of the guns on the same gun deck should require lighter charges, the boxes are to be painted red and ~~black.~~ White

Upon spar decks of vessels where the shot guns require lighter charges than those upon the gun decks, and also in sloops of war and steamers, the passing boxes for the shot guns will be painted black and white, and for the shell guns red ~~and white~~.

~~The tops of~~ passing boxes are fitted with a thin plate of copper between the two thicknesses of leather, which is visible through a circular hole in the upper leather. This plate is painted so as to shew through the hole; the colors which designate "near," "ordinary" and "distant" firing cartridges, and the plate is moveable upon a pivot which projects above the top leather. The color indicating the charge to be supplied is to be shown through the opening to assist the magazine men, in addition to the verbal orders which should be given. Passing boxes are to be made of strong and well tanned leather, and except for the service of shell guns above 8 inch, and the 64 pdr. shot gun, to be of sufficient height to contain *two near firing charges* for the heaviest gun of their calibre. The diameter of passing boxes should be 0.2 inch greater in the clear, than that of the cartridge for which they are intended.

The tops of all passing boxes are to be distinctly lettered with the calibre and class of gun which they are intended to serve.

FIRE BUCKETS.

473. Fire buckets are to be made of light well-tanned sole leather, according to pattern. Those on hand which will contain the regula-

Digitized by Google

tion battle lanterns will be supplied for covered decks, and those which are too small for that purpose, but are in other respects serviceable will be supplied for spar decks.

GROMMET MUZZLE LASHING FOR HOUSING GUNS.

474. A grommet made of rope double the size of the gun-tackle falls, with two cringles worked into it for the frapping lashing, which will be of stuff half the size of the tackle-falls.

The grommet will be made large enough just to slip over the swell of the muzzle when the bight is over the housing hook-bolt, and the gun is in position for housing. It will be wormed throughout, and parcelled in the wake of the housing bolt and frapping-lashing, and when there is no swell, in the wake of the muzzle ring.

When the housing bolt is an eye-bolt, the grommet is secured to it by means of a toggle which has a laniard.

PIVOT SHIFTING SCREW.

475. This implement is formed like Booth's rigging screw cut in two, midway of its length. It has a swivel hook at each end, adapted to eye-bolts in the breast of the slide, and in the water ways opposite the several fighting bolts, when the gun is in the position for shifting.

The screw is turned by means of a forked wrench applied to its square shank.

By means of this implement the *slide* may be steadily moved forward, so as to bring the pivot hole in the slide directly over the socket in the deck, when a moveable pivot bolt is used; or the flap over the fixed pivot, when that arrangement obtains, thus compensating for the recoil.

FUZE WRENCHES.

476. Of steel, shank round, four inches long, four-tenths of an inch in diameter. Prongs round, one and a half inch long, three-tenths of an inch diameter. Cross handle of wood with small forked screw-driver in one end for water cap. The prongs of wrench are flattened at the ends, and are one and a half inch apart.

Digitized by Google

ACCOUTREMENTS FOR CAPTAINS OF GUNS, BOARDERS AND SMALL ARM MEN.

477. WAIST BELTS to be made of buff leather, 2 inches wide and from forty to forty four inches long; a standing loop and eyelet holes at one end and brass hook riveted to the other.

The same belt is used by Captains of guns and boarders as well as by small arm men and the crews of field howitzers, the *frogs* and *boxes* to hold the arms and ammunition being fitted with loops to slip on and off the belt as circumstances require, and in the following order:

1st and 2d Captains of guns, and of field and boat howitzers wear the primer box in front; if they are boarders, the sword frog on the *left* and the *pistol* frog on the *right* hip. These equipments, consequently, will be slid on towards the loop end of the belt in the order just named.

Other boarders and gun's crews of howitzers when used as field guns wear their arms, as in the preceding case, *without the primer box.*

Men armed with muskets and acting on shore, will wear musket cartridge boxes fitted with shoulder belt and frog and scabbard for bayonet.

Men who may be armed with carbines on shore duty, will wear cartridge boxes with shoulder belts. For boat duty, or *when armed with pistols and swords*, they will wear the waist belt with the proper frogs and boxes.

478. SWORD FROGS, of buff leather, to slide on the waist belt. *Belt loop* two and one tenth inches in the clear, sewed at the bottom with double seam; width at top three and a half inches, at bottom four and a quarter inches, height three and a quarter inches.

479. SWORD LOOP, width at top four and a half inches, at bottom three and a half inches; height, three and a quarter inches—sewed with double seam on each side; eyelet hole on the outside.

480. PRIMER BOXES, of black bridle leather, rectangular in form and of the exact size to contain the tin *packing box.* Flap covering the top and front with a button hole *strap* one inch in width, sewed near the bottom; *brass button* riveted to the bottom of the box. *Loop* two inches wide placed upright on the back of the box, for the waist belt to pass through.

481. PISTOL FROG (buff leather) wide enough at the mouth to

Digitized by Google

cover the cock of the pistol and at the lower part to accommodate the stock; upper part of the back of it turned down to form a loop large enough to admit the waist belt. The stitches forming the side seams not to come nearer than .25 inch from the edges of the leather.

Pocket (thin bridle leather, *to contain three cartridges*) flap, tongue and loop.

Cap-pocket, like the cartridge pocket—*lining*, a strip of sheepskin with the wool on, glued with fish glue, and sewed to the back at the mouth of the pocket.

These two pockets are of the same depth, and occupy the whole breadth of the pistol frog.

482. THUMBSTALLS of buckskin, with hair-stuffed pad, and thongs for the wrist.

483. MUSKET CARTRIDGE BOX, (black bridle leather) length 7.2 inches; width 1.6 inch; depth in front 5.8 inches—inner cover (upper leather) 4 inches wide with end pieces sewed to it so as to cover the ends of the box—flap (harness leather) 8.5 inches wide at bottom, 8 inches at top, stamped U. S. N., in an oval on the outside—a button-hole strap sewed near the bottom,—brass button riveted to the bottom of the box—loop (bridle leather) with a hole in the middle to hook the shoulder belt to, sewed to the back of the box for the waist belt to pass through.

Cap-pocket (light upper leather) sewed to the front of the box; length 4½; depth 2½ inches; flap, tongue and loop, (bridle leather) —*lining*, a strip of sheepskin with the wool on, 1.5 inches wide, glued with fish glue, and sewed at the mouth of the pocket—*pocket* for *ball screw* and *wiper* sewed on the right, and for *conekey* and *cone-pick* on the left of the cap-pocket.

Two tin linings, each with a *lower division*, 3 inches by 3.3 inches, open in front, to contain a bundle of 10 cartridges, and two bundles of caps containing 25 each, packed in water proof paper. Each tin has also *two upper divisions*, one 2.7 inches deep, one of two inches by 1.35 inch, for 6 cartridges, the other 1.35 inch square, for four cartridges. The edges of the tins are turned over and soldered down, to prevent them from cutting the cartridges.

All the tin linings should be made to slide freely in the boxes.

484. CARBINE CARTRIDGE BOX.—The leather parts are like those of the musket cartridge box; length 6.4 inches, depth in front 3.7 inches,

Digitized by Google

width 1.3 inch—*inner cover* 3.5 inches wide; *flap* 6.6 inches wide at top, 6.8 at bottom, 6 deep. Tin linings, two lower divisions, two inches deep, 2.9 inches long; 1.2 wide; 5 upper divisions, 1.2 inch wide by 1.15 inch long, and 1.5 inch deep, to contain forty cartridges in bundles of water proof paper.

485. SHOULDER BELT for musket or carbine boxes, to be made of buff leather 5 feet long, 1½ in. wide; brass hook riveted at each end; 12 eyelet holes at one end, one inch apart.

486. CONE-PICK, (steel wire, No. 18,) 1.5 inch long, with a ring handle .5 inch in diameter—it is carried with the conekey in the pocket in front of the musket cartridge box.

487. BAYONET SCABBARD, (black bridle leather,) length including the ferule and tip 19.3 inches, *ferule and tip*, brass. Frog (buff leather) sewed to a socket of black leather, which is fastened to the top of the scabbard; the loop of the frog to be made wide enough to slide on the waist belt.

Digitized by Google

CARTRIDGE BAGS.

488. The material of which cartridge bags are made is woven expressly for the purpose, and furnished by the Bureau of Ordnance as required. When procured of necessity elsewhere, the stuff should be chosen of wool, entirely free from any mixture of thread or cotton, and of sufficiently close texture to prevent the finer particles of powder from sifting through. Wildbore, merino, and bombazette, are named as proper materials for cartridge bags; of these the thinnest stuff, not twilled, but having the requisite strength and closeness of texture, is the best.

489. MAKING CARTRIDGE BAGS.—Cartridge bags, for the service of shell guns and cannon, are to be made of a rectangle to form the cylinder, and a circular piece to form the bottom. The flat patterns, by which the cartridge bags are cut, are, consequently, to be made rectangular for the cylindrical part of the bag and circular for the bottom. The *length* of the rectangle is equal to the development of the cylinder together with the allowance for seam, and its *width* to the whole length of the bag, before sewing, including the allowance for seam and tie.

(490.) DIMENSIONS OF FLAT PATTERNS, TO BE MADE OF PINE, FOR CUTTING OUT CARTRIDGE BAGS.

Dimensions.	10 inch Shell gun of 89 cwt.			64 pdr. Cannon of 106 cwt.			32 pdr. Cannon and 8 inch Shell-guns, having chambers of 32 pdr. calibre.								Remarks.
Charges . . . lbs.	10	9	8	16	12	8	10	9	8	7	6	5	4½	4	3	
Width of rectangle (length of bag cut) in.	15.3	14.3	13.3	18.7	15.7	12.7	16.6	14.6	13.6	12.6	11.6	10.6	10.1	9.6	8.6	Including tie & four tenths of an inch for seam.
	inches.			inches.			inches.								
Length of rectangle (cylinder developed)	19.65			22.8			18.1								Including eight tenths of an inch for seam.
Radius of circular pattern of bottom	3.40			3.60			2.95								Including four tenths of an inch for seam.
Diameters of cylindrical formers for inspection of cartridge bags . . .	6.00			7.00			5.50								

Digitized by Google

491. In cutting, the length of the rectangle should be taken in the direction of the length of the stuff as it does not stretch in that direction, and the material should be chosen, as nearly as possible, of the width required for the length of the bags, to save waste in cutting.

The bags are to be sewed with worsted yarn, with not less than eight stitches to an inch; they are to be stitched within four tenths of an inch of each edge, and the two edges of the seam *basted* or *felled down* upon the same side to prevent the powder from sifting through. The edges of the bottom are basted down upon the sides.

The bags when filled, are to be tied with woolen thrums.

492. *Cartridge bags for saluting charges.*—Old cartridge bags which have been condemned for service charges are to be repaired and used for saluting charges, and whenever it is necessary to make bags expressly for the purpose, or for immediate use, they may be formed by sewing together two rectangular pieces with semi-circular ends.

493. *Inspection.*—The material especially procured for cartridge bags is to be carefully inspected, to detect any mixture of cotton with the wool, by burning a few bits, taken at hazard from each piece. The texture of the stuff is also to be examined and its strength tried, such standard for the latter being established as may be found sufficient to ensure perfect efficiency.

After being made up, the empty bags are to be inspected, and those which are sewed with too long stitches, or in any other than the prescribed manner, are to be rejected. The dimensions of each bag are to be verified, first by laying it flattened out, between two marks on a table, shewing the width of a pattern bag. A variation of 0.1 inch greater or less is allowed. The bags are also to be tried on cylindrical mandrels, or formers, made according to the dimensions given on the preceding page.

494. *Preservation from moths.*—Serge or any other woolen material employed for making cartridge bags, is never to be exposed on the shelves in store, either in the piece, or when made up. It is to be protected by packing with the hydraulic press—by sewing it up in linen cloth, or by enveloping it in water proof paper, hermetrically sealed.

An infusion of coloquintida, in the proportion of 15½ grains troy, to a quart of water, is said to be a good preservative against moths.

Digitized by Google

In case of using this preparation, the cartridge bags should be steeped in the infusion, and after being *thoroughly* dried may be packed by the hydraulic press, and headed up in old whisky barrels, if stored on shore, or packed in empty tanks if on board ship.

Cartridge bags as well as the material for making them are to be frequently examined to prevent their being damaged by *moisture* as well as to guard against moths.

SELVAGEE WADS.

495. *Selvagee wads* are made by the wad machine at the Navy Yards. This consists of pairs of disks adapted to each calibre of guns, which being placed face to face on a spindle and keyed, present an annular score grooved in such a way as to make, when filled, a grummet of the requisite size. Transverse notches are cut in the circumference of the disks, to the bottom of the score, for the convenience of half hitching the wad before taking it off the mould.

In making the wad, the end of a rope yarn is fixed in the score and the mould is turned by a crank until the score is filled. The grummet thus formed, is to be half-hitched like a selvagee strap, and a section of a~~bout half~~ an inch or more is taken out of it in order to make the wad when swelled by dampness, enter the bore of the gun readily. In ~~cutting the wad for this purpose care is to be taken to~~ leave the ~~connection of the ends by the half-hitching which serves to preserve the annular shape of the wad.~~ On pass firmly under the Shot

Selvagee wads should be made neither too hard nor too soft, and to avoid either of these extremes a sufficient number of hitches only will be taken to give the wad the consistency required for service.

Note It has been found that a part, Equal to one third or one fourth of the Grommet, merely bent when put in the Gun & rammed home with the Shot, will retain the Shot in place as well as the prescribed mode.

Digitized by Google

MISCELLANEOUS

IMPLEMENTS AND EQUIPMENTS.

ELEVATORS.

496. The elevating apparatus, for the supply of powder, consists of an endless leathern belt, with double copper hooks, fixed on it at intervals of two feet. The hooks lie vertically on the belt, so that there is always in each pair one point up and one down, upon which full passing boxes may be sent up from, and empty ones returned to, the orlop or berth deck. The belt works over two wooden wheels, the upper one of which is placed above the deck, which the *elevator* is intended to supply, and the lower one on the orlop or berth deck. Each *elevator* is worked by a man stationed at the lower wheel, which he turns by means of a crank.

A spare belt is to be made up in a neat *flemish coil*, and becketted over head, on the uppermost covered deck, to which the elevator extends, together with the necessary quantity of small line for repairing the band in case it should be broken.

MAGAZINE DRESSES.

497. Are to be of worsted, like a simple shirt, to reach to the knees—no metal buttons to be worn.

The shoes are to be made with alum-dressed buffalo soles and light uppers, and no others are to be worn.

RATTLES FOR CALLING BOARDERS.

498. To be made like those used by Watchmen, of white oak, or some other similar wood. Rattle 12 inches long—ratchett 2 inches in diameter; spring one inch in width, and of sufficient thickness and elasticity to produce the requisite sound. Weight enough should be given to the butt, to cause it to revolve round the handle with ease.

Digitized by Google

FIRE SCREENS.

499. Are made of thick fearnaught or of double baize, with holes through which to pass the powder—these holes to be covered by broad flaps of the same material. One screen is to be hung abaft, and another forward of the magazine passing-hatch and scuttles in sloops of war; in ships of the line and frigates one is usually to be hung abaft the fore, and one forward of the after magazine scuttle—but as ships are differently arranged, two to each magazine will be allowed, if required.

SHOT BUCKETS.

500. Are to be made of oak, strongly bound with iron, to contain six 32 pdr. shot—*bale* of iron, to be so placed as to allow the bucket to be easily emptied. Shot buckets are only allowed to ships of the line and frigates.

SHELL WHIPS.

501. To be made of two inch rope, rove through two single blocks, one above the other in the shell hatchway, and the ends knotted together. A hook is fixed on each part of the whip near the block, so that the parts being bowsed on alternately, a full box is brought up on one hook, and an empty one lowered by the other, at the same time.

FLASH PANS.

502. Shallow copper bowls, large enough to hold an ounce of powder, with a handle two feet long.

DARK LANTERNS.

503. To be made of copper, tinned inside, with two handles at the side that the shade may be turned without *taking hold of the top.* The whole height 12 inches, diameter 4 inches.

Digitized by Google

BOAT GRAPNELS.

504. Are made of round iron, quite light for throwing into the rigging, or chains of the enemy, for the purpose of holding on when boarding; their prongs are barbed.

Six feet of small chain are to be attached to the ring and connected with six fathoms of one and three quarter rope.

TARGETS.

505. TARGETS, for practice at sea, may be made in the following manner. Fit two boards from 12 to 16 feet long, 10 or 12 inches wide and an inch thick, to slip loosely over and traverse round a spar about 12 feet long, and four or five inches in diameter, with pins or a jog to keep them about three feet from the lower end of it. Fit also two very light spars for yards, the same length as the boards, so as to swivel on a tenon upon the upper end of the mast—fit screens of thin old canvass, or cheap cotton stuff, to fill the space between the yards and the boards of the float, and have small lines to confine the yards over and to the boards. To rig the target for use, secure the boards of the float at right angles to each other by ratline stuff, fit the yards over them, attach the screens to the yards and boards, and the necessary ballast to the lower end of the mast, to keep the target upright and steady.

When not wanted for immediate use, the parts may be separated, and will occupy but little space. The target may be picked up, in rough weather, by means of a small grapnel without lowering a boat.

PACKING BOXES.

506. Cartridges for small arms, primers, spur-tubes, percussion caps, spare fuzes, false fires, blue lights, portfires and signal rockets will generally be supplied to vessels in boxes, in which they can be kept with little liability to injury, until wanted for use.

These boxes are to be safely kept, and returned into store or accounted for in the same manner as other articles of Ordnance stores, by those persons in whose charge they may be placed.

Digitized by Google

GRIOLET.

507. THE GRIOLET PURCHASE for dismounting guns on covered decks is composed of—

A *toggle block*, made of elm or oak, the outer end or *head* of which is made rather larger in diameter than the inner one which exactly fits the bore of the 32 pdr. The *head* has two sheaves in it, so as to form the lower block of the *muzzle purchase*, and is bound at the outer end with an iron band.

A double *cascable block* of iron is made either with a shackle, or to fit between the jaws of the cascable, where it is secured by the cascable pin. The iron pins on which the sheaves revolve are formed with eyes, for the convenience of hitching the standing part of the purchase.

Two *iron treble blocks*, one for the upper muzzle and the other for the breech purchase.

The *muzzle purchase block* is so fitted as to be either shackled or toggled to the housing bolt above the port, and the *breech purchase block* has an iron strap terminating above with an eye by which it is shackled to a bolt passing through the deck above the gun. This bolt has an eye in one end and a screw or key-slit at the other, and when in place, is secured above the deck with a nut or key between which and the deck a washer of hard wood or iron of suitable breadth and thickness is placed.

The hole through which this bolt is put, should be directly above the cascable block when the muzzle of the gun is under the housing bolt, and may be bored at the time the gun is to be dismounted; and stopped afterwards with a plug of wood coated with white lead.

But as it is desirable that every division on the gun deck should be exercised in mounting and dismounting its guns, a hole may be made in the deck above each division and bouched with a composition screw-tap.

The purchase falls should not be less than three and a half inches in size, and should be made of manilla rope of sufficient length to reeve full, the gun being supposed to be on deck and the upper blocks in place, allowing also sufficient end for splicing in the thimbles and hitching the standing part of the purchase when rove.

An iron thimble large enough to hook the double block of a side or train-tackle is spliced into the end of each purchase fall.

Digitized by Google

GUN SLINGS.

503. Are to be made of chain of $\frac{3}{4}$ inch iron and tested to secure proper strength: the rings are to be of $1\frac{1}{4}$ inch iron. The length of the slings should exceed by one foot that of the longest gun on board. The two parts should be parcelled and marled together for a space of two feet before and one foot behind the trunnions of the longest gun, and a piece of three inch rope spliced around both parts in the wake of the parcelling, long enough to take four or five turns round the chase of the largest gun.

Digitized by Google

PAINTS, LACKERS, &c.

COMPOSITION AND PREPARATION.

509. The proportions are given for 100 parts by weight of prepared colors, &c., when not otherwise designated.

A gallon of Linseed Oil weighs	7.5 lbs.
Spirits of Turpentine	7.25 "
Japan Varnish	7. "
Sperm Oil	7.12 "
Neatsfoot Oil	7.63 "

PAINTS AND LACKERS.

White Paint.

	Proportions For inside work.	For outside work.
White Lead, ground in oil	80 lbs.	80 lbs.
Boiled Oil	14.5 "	9 "
Raw Oil		9 "
Spirits Turpentine	8 lbs.	4 "

Grind the white lead in the oil, and add the spirits of turpentine. New wood work requires about 1 lb. to the square yd. for 3 coats.

Lead Color.

White Lead, ground in oil	75. lbs.
Lampblack	1. "
Boiled Linseed Oil	23. "
Litharge	0.5 "
Japan Varnish	0.5 "
Spirits Turpentine	2.5 "

The lampblack and litharge are ground separately upon the stone, in oil, then stirred into the white lead and oil; the turpentine and varnish are added as the paint is required for use, or when it is packed in kegs for transportation.

Digitized by Google

Black Paint.

Lampblack	28 lbs.
Litharge	1 "
Japan Varnish	1 "
Linseed Oil, boiled	73 "
Spirits Turpentine	1 "

Grind the lampblack in oil; mix it with the oil, then grind the litharge in oil and add it, stirring it well into the mixture. The varnish and turpentine are added last.

The paint is used for the iron work of carriages.

Paint for Tarpaulins.

A square yard takes 2 lbs. for three coats.

1. *Olive.*—Liquid Olive Color - - - - - 100 lbs.
Beeswax - - - - - - - - - 6 "
Spirits Turpentine - - - - - 6 "

Dissolve the beeswax in the spirits of turpentine, with a gentle heat, and mix the paint warm.

2. Add 12 oz. of beeswax to a gallon of linseed oil, and boil it two hours; prime the cloth with this mixture, and use the same in place of *boiled oil* for mixing the paint. Give two coats of paint.

Lackers for Iron Ordnance.

1. Black Lead, pulverized - - - 12 lbs.
Red Lead - - - - - - - - 12 "
Litharge - - - - - - - - - 5 "
Lampblack - - - - - - - - 5 "
Linseed Oil - - - - - - - - 66 "

Boil it gently about twenty minutes, during which time it must be constantly stirred.

2. Umber, ground - - - - - - 3.75 lbs.
Gum Shellac, pulverized - - 3.75 "
Ivory Black - - - - - - - 3.75 "
Litharge - - - - - - - - 3.75 "
Linseed Oil - - - - - - - 78. "
Spirits Turpentine - - - - 7.25 "

The oil must be first boiled half an hour. The mixture is then boiled 24 hours, poured off from the sediment, put in jugs and corked.

Digitized by Google

3. Coal Tar (of good quality) - - 2 galls.
Spirits Turpentine - - - - - 1 pint.

The turpentine to be added in small quantities during the application of the lacker.

4. Anti-corrosion, - - - - - 40 lbs.
Grant's black, ground in oil, - 4 "
Red lead, as a dryer, - - - 3 "
Linseed oil, - - - - - - - 4 galls.
Spirits turpentine, - - - - - 1 pint.

This mixture, when well stirred and incorporated, will be fit for use; but as by long keeping in this state it becomes hard, no more should be mixed than may be required for immediate use. It is used in the British service.

Anti-corrosion:—Slag from iron foundries, pounded, - 12 lbs.
Chalk, - - - - - - - - - - - 12 "
Soot, common, - - - - - - - - 1 "

In applying lacker, the surface of the iron must be first cleaned with a scraper and a wire brush, if necessary, and the lacker applied hot, in two thin coats, with a paint brush. It is best done in summer.

Old lacker should be removed with a scraper, or by scouring, and not by heating the guns or balls, by which the metal is injured.

A. PLANTON'S COMPOSITION FOR COATING IRON OR WOOD AS A PRESERVATIVE.

First Composition.

Pulverized rosin, - - - - 3 lbs.
Do. Shellac, - - - - 2 oz.
Do. Charcoal, or cannel coal, 1 lb.
Spirits turpentine, - - - - 1 oz.

Second Composition.

Pulverized rosin, - - - - - 3 lbs.
Beeswax, - - - - - - - - 4 oz.
Pulverized charcoal, or cannel coal, 1 lb.
Spirits turpentine, - - - - 1 oz.

Digitized by Google

The first two articles are to be dissolved in an iron vessel over the fire; the charcoal is then added, and briskly stirred until the whole is well intermixed; after which the turpentine is added and stirred until it is well incorporated with the other ingredients.

The composition is to be applied when hot with a brush or spatula, and smoothed over with a hot iron. The wood or iron should be perfectly dry, and freed from rust or other loose substances.

Lacker for Small Arms, or for water proof paper.

Beeswax,	13 lbs.
Spirits turpentine,	13 galls.
Boiled linseed oil,	1 "

All the ingredients should be pure and of the best quality. Heat them together in a copper or earthern vessel over a gentle fire, in a water bath, until they are well mixed.

Lacker for bright Iron Work.

Linseed oil, boiled,	80.5
Litharge,	5.5
White lead, ground in oil,	11.25
Rosin, pulverized,	2.75

Add the litharge to the oil, let it simmer over a slow fire three hours; strain it, and add the rosin and white lead; keep it gently warmed, and stir it until the rosin is dissolved. Apply it with a paint brush.

Varnish for Scabbards, &c., or Patent Leather.

For 1st and 2d coats:—	Prussian blue, in lumps,	4
	Sugar of lead,	0.7
	Aqua fortis,	0.7
	Linseed oil, boiled,	-70.
	Spirits turpentine,	-24.6

The ingredients, except the turpentine, are boiled together in an *iron* kettle eight hours, when the mixture will assume a brilliant black color. When the varnish is nearly cool, stir in the turpentine. The kettle in which the varnish is made should be of a capacity to hold double the quantity of varnish to be boiled.

Digitized by Google

For the third or finishing coat.—COPAL VARNISH.

Gum copal, (in clear lumps,) - - - -	26.5
Boiled linseed oil, - - - - - - - -	42.5
Spirits turpentine, - - - - - - - -	31.

This varnish is made in a *copper* vessel, smallest at top, in the form of a still.

Put the copal in the vessel, set it on a charcoal fire for one hour, in which time it will melt, and all the watery particles will evaporate. Add the oil whilst the copal is warm, but not boiling hot. When nearly cool, add the turpentine, which will give it a proper consistency for use.

For 5 lbs. copal and the proper proportions of oil and turpentine, the vessel should hold six gallons.

Digitized by Google

APPENDIX.

Page.

(A.) Forms of Quarter Bills - - - - - - 162

(B.) Tables of Gunnery Practice - - - - - 174

(C.) Forms of Reports of Inspection and of Target Practice - 177

Table of Allowances - - - - - - - - i to xvii

Digitized by Google

APPENDIX A.

FORMS OF QUARTER BILLS.

Each gun's crew is to be selected in equal proportions of ⅓ petty officers and seamen, ⅓ ordinary seamen, ⅓ landsmen and boys, and from the parts of the ship's company shown in the headings of the columns in the following table; the 1st and 2d parts alternately from the starboard and port watches. For the other divisions the men are to be taken as equally as possible from both watches.

The proposed quarter bills are arranged upon the present allowances of men for the respective classes of vessels for which they are intended, and upon the assumption that the numbers allowed to the different watch stations will be as follows.

If the actual numbers should be different the selections must be varied accordingly.

Stations.	For a Ship of the Line.	For a Frigate.	For a Sloop.	For a Steamer.
Petty Officers.	76	59	37	40
Forecastle - -	100	60	24	32
Fore Top - -	90	56	22	30
Main Top - -	100	60	26	32
Mizen Top -	46	36	20	-
After Guard -	154	80	33	37
Waisters - -	136	40	-	-
Musicians - -	11	10	-	9
Marines - -	63	49	26	46

Digitized by Google

QUARTER BILL

OF A SHIP MOUNTING 84 GUNS, WITH A COMPLEMENT OF 820 MEN.

QUARTER DECK.

Captain, Commander or other Executive Officer, Master, Passed Midshipman (Signal Officer,) 2 Midshipmen (aids,) and Captain's Clerk.

Decks.	No. of gun.	No. of men.	Petty Officers.	Fore Castle.	Fore Top.	Main Top.	Mizen Top.	After Guard.	Waist.	Watches, and parts of gun's crews. St'd.	Watches, and parts of gun's crews. Port.	OFFICERS OF DIVISIONS.
Lower	1	14&boy	1 C. F.	3	3	3	1	2	2	1st	2d	1st Division.
"	2	"	-	3	3	3	1	3	2	2d	1st	
"	3	"	-	3	2	3	1	3	3	1st	2d	1st Lieutenant or Senior Watch Officer, Midshipman.
"	4	"	1 C. T.	2	2	2	1	3	4	2d	1st	1 Quarter Gunner.
"	5	"	-	3	2	3	1	3	3	1st	2d	
"	6	"	-	3	2	3	1	3	3	2d	1st	
"	7	"	-	3	2	2	1	3	4	1st	2d	2d Division.
"	* 8	16&boy	1 B. M.	2	3	2	1	4	4	2d	1st	
"	9	"	1 C. T.	3	2	3	1	4	3	1st	2d	2d Watch Officer, Midshipman.
"	10	14&boy	-	3	2	2	1	3	4	2d	1st	1 Quarter Gunner.
"	11	"	1 C. T.	2	2	3	1	3	3	1st	2d	
"	12	"	-	3	2	2	1	4	3	2d	1st	3d Division.
"	13	"	1 C. T.	2	3	2	1	3	3	1st	2d	
"	14	"	-	3	3	2	1	3	3	2d	1st	3d Watch Officer, Midshipman.
"	15	"	-	3	2	2	1	4	3	1st	2d	
"	16	"	1 C. T.	2	2	2	1	4	3	2d	1st	1 Quarter Gunner.
Main	1	12&boy	1 C. F.	3	2	2	1	2	2	1st	2d	4th Division.
"	2	"	1 C. T.	2	2	2	1	2	3	2d	1st	4th Watch Officer, Midshipman.
"	3	"	-	2	2	2	1	4	2	1st	2d	
"	4	"	1 Q. M.	2	2	2	1	2	3	2d	1st	1 Quarter Gunner.
"	5	"	S.cook.	2	2	2	1	2	3	1st	2d	To attend Elevator at after part of Fore Hatch, 1 Waister.
"	6	"	-	2	2	2	1	2	4	2d	1st	
"	7	"	-	2	2	3	1	3	2	1st	2d	5th Division.
"	* 8	14&boy	1 Q. M.	2	2	3	1	3	3	2d	1st	5th Watch Officer, Midshipman.
"	9	"	1 Q. M.	2	2	3	1	3	3	1st	2d	1 Quarter Gunner.
"	10	12&boy	-	3	2	3	1	2	2	2d	1st	To attend Elevator at After H. Hatch, 1 Waister.
"	11	"	-	2	2	2	1	3	3	1st	2d	
"	12	"	1 B. M.	2	2	2	1	2	3	2d	1st	Spt. Room " 1 Waister.
"	13	"	1 C.A.G.	2	2	2	1	3	2	1st	2d	
"	14	"	-	2	2	2	1	3	3	2d	1st	6th Division.
"	15	"	1 Q. M.	2	2	2	1	3	2	1st	2d	6th Watch Officer, Midshipman.
"	16	"	1 C. F.	1	2	2	1	3	3	2d	1st	1 Quarter Gunner.
Spar	1	12&boy	1 B. M.	4	2	2	1	2	1	1st	2d	7th Division.
"	2	8&boy	1 C. T.	3	2	.	1	2	.	2d	1st	7th Watch Officer, Midshipman.
"	3	"	-	3	2	2	1	.	1	1st	2d	
"	4	"	-	3	2	2	1	.	1	2d	1st	1 Quarter Gunner.
"	5	"	-	2	3	3	1	.	.	1st	2d	To attend Elevator at Fore Scuttle, 1 Forecastleman.
"	* 6	12&boy	1. B. M.	.	2	2	1	4	3	2d	1st	
"	7	"	1 Q. M.	.	2	2	2	4	2	1st	2d	
"	8	8&boy	-	.	2	3	1	3	.	2d	1st	8th Division.
"	9	"	1 C. T.	.	.	3	1	2	2	1st	2d	P. Midshipman.
"	10	12&boy	1 Q.M. 1 C.Std	.	1	2	.	5	3	2d	1st	Midshipman. 1 Quarter Gunner.

* Shell Guns.

Digitized by Google

QUARTER BILL

OF A SHIP MOUNTING 84 GUNS—Continued.

STATIONS.	Petty Officers.	F. C.	F. T.	M. T.	Miz. T.	A. G.	OFFICERS.
Conn	1 Q. M.	.	.	.	.	.	Master's Division.
Wheel	1 Q. M.	1	.	1	.	1	Quarter Deck.
Signals	1 Q. M.	.	.	.	1	.	Master.
R. tackles	1 Q. M.	.	.	.	.	2	
M. braces	1 C. A. G.	.	.	.	.	7	Forecastle.
Cross-jack braces	-	.	.	.	1	4	Boatswain.
Miz. top	-	.	.	.	2(S)	.	
M. T. braces	-	.	.	.	.	5	
M. mast	1 B. M.	.	.	.	.	2 M. M.	
Head braces	-	.	.	.	.	6	
Main top	-	.	.	3(S)	.	.	
Fore top	-	.	2 (Sea) 1 (O. S)	.	.	.	
H. preventer braces	-	.	.	.	.	4	
Forecastle	1 B. M 1 C. F.	5	.	.	.	.	
M. preventer braces	-	.	.	.	.	4	
Fore mast	-	2 M. M.	.	.	.	.	

STATIONS.	RATINGS.	OFFICERS.
Fore Magazine	2 Gunner's Mates, 3 Quarter Gunners, 1 Boy (A. G.)	Powder Division.
After Magazine	1 Gunner's Mate, 2 Quarter Gunners, 1 Boy (A. G.)	2d Master or a Passed Midshipman.
Shell Room and Whips.	1 Gunner's Mate, 1 Quarter Gunner, 1 Armorer, 1 A. G.	Purser's Clerk.
Shot Lockers	Cooper, 2 Captains Hold, 1 Waister	Sailmaker.
Pumps	1 Carpenter's Mate	Gunner in the Fore Magazine.
Lights, forward and aft	Master-at-arms	Carpenter at the Pumps.
	2 Ship's Corporals	
Store Rooms & Armory	Yeoman and Armorer's Mate	
Wings and Force Pumps	2 Carpenter's Mates, 2 Carpenters (Waisters)	
	Supply of Lower Deck.	Return of empty Boxes.
	Guns forward of Shell Guns.	
Starboard Scuttle of Fore Magazine	1 Quarter Gunner	Empty boxes of *lower Deck Guns* to be passed down through Scuttles on the opposite side of the same hatchway, through which the full boxes are passed up.—Art. 121, P. 21.
To pass Powder to Scuttle at forward part, port side, Fore Hatch	1 Ship's Corporal, 2 Musicians, 1 Waister	
Ladder of Fore Hatch	Master of Band	
	Guns abaft Shell Guns.	
Port Scuttle, After Mag.	1 Quarter Gunner	
To pass Powder to Scuttle at after part, port side, of Spt. Room Hatch	2 Waisters, 2 Musicians, Cabin Cook	
Ladder of Spt. Room Hatch	Ward Room Steward	

Digitized by Google

QUARTER BILL

OF A SHIP MOUNTING 84 GUNS—Continued.

STATIONS.	RATINGS.	OFFICERS.
	(Shell Guns.)	
Centre Scuttle of After Magazine.....	1 Sail Maker's Mate.....	
To pass Powder to Scuttle in port side, after part of After Hold Hatch.....	1 Musician, 9 Waisters.....	
Ladder of Aft.H.Hatch	Ship's Steward.....	
	SUPPLY OF MAIN DECK.	
	Guns forward of Shell Guns and forward Chase Guns of Spar Deck.	
Port Scuttle of Fore Magazine.....	1 Quarter Gunner.....	
To pass Powder to Elevator in After part, port side of Fore Hatch.....	3 Waisters, 3 Musicians.....	
To work Elevator at Fore Hatch.....	1 Waister.....	
	Guns abaft Shell Guns, and after Chase Guns of Spar Deck.	
Starboard Scuttle of After Magazine...	1 Quarter Gunner.....	
To pass Powder to Elevator in forward part, Starboard side of Spirit Room Hatch.....	2 Waisters, 2 Musicians, W. R. Cook.....	Empty boxes from Main and Spar Decks to be returned by the Elevators.—(Art.122, 123, 128.
To work Elevator at Spirit Room Hatch	1 Waister.....	
	Shell Guns of Main and Spar Decks.	
To pass Powder to Elevator in forward part, port side, After Hold Hatch...	2 Waisters.....	
To work Elevator at After Hold Hatch..	1 Waister.....	
	SUPPLY OF SPAR DECK.	
	(Excepting Shell and Chase Guns.)	
Centre Scuttle of Fore Magazine.....	1 Sailmaker's Mate.....	
To pass Powder to Fore Scuttle.....	Painter, 1 Waister.....	
To work Elevator at Fore Scuttle.....	1 Waister.....	

Digitized by Google

QUARTER BILL

OF A SHIP MOUNTING 84 GUNS—Continued.

STATIONS.	RATINGS.	OFFICERS.
		Surgeon's Division.
Cockpit.....	Surgeon's Steward..... (See Art. 71, P. 12.)	Surgeons & Assistants, Chaplain, Purser and Profr. of Mathematics.
		Marine Division.
Spar Deck.....	3 Sergeants, 4 Corporals..... 4 Musicians, 52 Privates.....	Captain. 2 Lieutenants.

Note.—When required, Marines may be stationed to supply deficiencies at the Great Guns.

Digitized by Google

QUARTER BILL

OF A SHIP MOUNTING 50 GUNS WITH A COMPLEMENT OF 480.

QUARTER DECK.

Captain, Executive Officer, aids to Captain, Signal Officer, and Captain's Clerk.

Main Deck.

No. of Gun.	No. of men.	P. Officers.	F. Cas.	F. Top.	M. Top.	Miz. Top.	A. G.	Waist.	Watches, and parts of gun's crews. St'd	Watches, and parts of gun's crews. Port.	OFFICERS OF DIVISIONS.
1	12&boy	1 C. F.	3	3	2	1	2	1	1st	2d	1st Division.
2	"	1 C. F.	3	3	2	1	3	.	2d	1st	Senior Watch Officer.
3	"	-	3	3	2	1	4	.	1st	2d	2 Midshipmen.
4	"	S. Cook, & C. T.	3	3	2	1	2	.	2d	1st	1 Quarter Gunner.
5	"	-	3	3	2	1	2	2	1st	2d	To attend Elevator Fore Hatch, 1 Main Topman.
6	"	-	3	2	3	1	2	2	2d	1st	2d Division.
7	"	1 B. M.	3	2	2	1	2	2	1st	2d	2d Watch Officer.
* 8	14&boy	-	3	3	2	1	3	3	2d	1st	2 Midshipmen.
9	"	1 C. T.	3	2	2	1	4	2	1st	2d	1 Quarter Gunner.
10	12&boy	-	3	2	2	1	3	2	2d	1st	To attend Elevator Main Hatch, 1 After Guard.
11	"	-	3	2	2	1	2	3	1st	2d	3d Division.
12	"	-	2	2	2	1	2	4	2d	1st	3d Watch Officer.
13	"	1 C. T.	2	2	2	1	2	3	1st	2d	2 Midshipmen.
14	"	Cab. S.	2	2	2	1	2	3	2d	1st	1 Quarter Gunner.
15	"	1 C. T.	2	2	2	2	2	2	1st	2d	To attend Elevator Steerage Hatch, 1 Main Topman.

Spar Deck.

1	12&boy	1 C. F.	3	4	2	1	2	-	1st	2d	4th Division.
2	8&boy	-	3	3	2	1	-	-	2d	1st	4th Watch Officer.
3	"	1 C. T.	2	3	2	1	-	-	1st	2d	2 Midshipmen.
4	"	1 Q. M.	3	-	2	2	1	-	2d	1st	1 Quarter Gunner.
5	"	1 C. T.	-	-	2	2	4	-	1st	2d	To attend Elevators at Fore Scuttle and at Fore Hatch, 2 Forecastlemen.
* 6	12&boy	1 B. M.	1	2	2	2	4	1	2d	1st	
7	"	1 Q. M.	-	2	2	2	5	1	1st	2d	
8	8&boy	1 Q. M.	-	1	2	1	4	-	2d	1st	5th Division.
9	"	1 Q. M.	-	1	2	1	3	1	1st	2d	Passed Midshipman.
10	12&boy	1C.A.G.	-	-	2	3	5	2	2d	1st	1 Midshipman. 1 Qr. Gunner.

* Shell Guns.

Digitized by Google

QUARTER BILL

OF A SHIP MOUNTING 50 GUNS—Continued.

STATIONS.	P. Officers.	F. C.	F. T.	M. T.	Miz. T.	A. G.	OFFICERS.
Conn	1 Q.M.	.	.	.	.	.	Master's Division.
Wheel	1 Q.M.	1	.	.	.	1	
Signals	1 Q.M.	.	.	.	1	.	Quarter Deck.
R. tackles	1 Q.M.	.	.	1	.	1	
Main brace	1C.A.G.	.	.	.	.	2	Master.
M. T. B.	-	.	.	.	.	1	
Cross jack braces	-	.	.	.	2	2	
Mizen top	-	.	.	.	1 (S.)	.	
Main top	-	.	.	2 (S.)	.	.	Forecastle.
Main mast	1. B. M.	.	.	2 M.M	.	.	
H. braces	-	.	.	1	.	2	Boatswain.
Fore-top	-	.	2 (S.)	.	.	.	
H. preventer braces	-	2	.	.	.	.	
Forecastle	1 B. M. 1 C. F.	2	.	.	.	.	
M. preventer braces	-	.	2	.	.	.	

STATIONS.	RATINGS.	OFFICERS.
Fore Magazine.	1 Gunner's Mate, 2 Qr. Gunners, 2 A. G.	Powder Division.
After Magazine	1 Gunner's Mate, 2 Qr. Gunners, 1 A. G.	Passed Midshipman.
Shell Room & Whips.	1 Quarter Gunner, 1 Armorer, 1 Waister	Gunner in the Fore Magazine.
Shot Lockers	Cooper and 2 Captains Hold	
Lights, Forward and Aft	Master-at-Arms 2 Ship's Corporals	Carpenter, At the Pumps.
Store Rooms	Yeoman	
Wings	Carp. Mate, 2 Carp., (Waisters)	Sailmaker.
Pumps	1 Carpenter's Mate	
	Supply of Main Deck.	
	Forward Division of Main Deck Guns and forward Chase Guns of Spar Deck.	
Port Scuttle of Fore Magazine	1 Quarter Gunner	
Fore Passage and Ladder	Ship's Steward, 3 Musicians, 1 Waister	
Berth Deck, to work Elevator at Fore Hatch	1 Waister	
	2d Division.	
Centre Scuttle of Fore Magazine	Sailmaker's Mate	
Berth Deck, to pass to Elevator at Main Hatch	1 Waister, 4 Musicians	
To work Elevator Main Hatch	1 After Guard	

Digitized by Google

QUARTER BILL

OF A SHIP MOUNTING 50 GUNS—Continued.

STATIONS.	RATINGS.	POWDER DIVISION.
	After Division, M. D., and After Chase Guns Spar Deck.	
Port Scuttle of After Magazine	1 Quarter Gunner	
Passage over Magazine	1 Maintopman	
To pass to Elevator, Steerage Hatch	Ward Room Steward, M. of Band, 2 Musicians	
To work Elevator S. H.	1 Musician	
	Supply of Spar Deck. *Forward Guns.*	
Starboard Scuttle, Fore Magazine	Painter	
To pass to Elevator at Fore Scuttle	Cabin Cook	
To work Elevator Fore Scuttle	W. R. Cook	
	After Guns.	
Starboard Scuttle, After Magazine	Purser's Clerk	
To work Elevator at Spirit Room Hatch	1 After Guard	
Cockpit	Surgeon's Steward. See Art. 71, P. 12.	Surgeon's Division. — Surgeons and Assistants. Purser.
		Marine Division.
Spar Deck	Sergeants 3 Corporals 3 Drum and Fife 2 Privates 40 Total 49	Lieutenant.

Note.—When required, Marines may be stationed to supply deficiencies at the Great Guns.

Digitized by Google

QUARTER BILL

OF A SLOOP OF 22 GUNS, COMPLEMENT, 210 MEN.

QUARTER DECK.

Commander, 1st Lieutenant, Master, Aid to Commander, Signal Officer, and Captain's Clerk.

No. of gun.	No. of men.	Petty officers.	F. C.	F. T.	M. T.	Miz. T.	A. G.	Watches, and parts of gun's crews. Str'd.	Port.	OFFICERS.
1	10 & boy	1 C. F.	2	2	2	1	2	1st	2d	1st Division.
2	"	1 C. T.	2	2	2	1	2	2d	1st	Sen. Watch Officer,
3	"	1 C. F.	2	2	2	1	2	1st	2d	Midshipman.
4	"	1 C. T.	2	2	2	1	2	2d	1st	1 Quarter Gunner.
5	"	—	2	3	2	1	2	1st	2d	2d Division.
6	"	1 C. T.	2	2	2	1	2	2d	1st	2d Watch Officer,
7	"	1 C.A.G.	2	2	2	2	1	1st	2d	Midshipman.
* 8	14 & boy	1 B. M.	2	2	3	3	3	2d	1st	1 Quarter Gunner.
* 9	"	1 C. T. Cooper	2	2	3	3	2	1st	2d	3d Division.
10	10 & boy	1 C. T. 1 Q. M.	2	2	2	2	1	2d	1st	3d Watch Officer, Midshipman.
11	"	1 C. St.	2	.	2	2	2	1st	2d	1 Quarter Gunner.

STATIONS.	Petty Officers.	F. C.	F. T.	M. T.	Miz. T.	A. G.	OFFICERS.
Conn	1 Q.M.	.	.	.	.	.	Master's Division.
Wheel	1 Q.M.	1	.	.	.	.	
Signals	—	.	.	.	1	.	Quarter Deck.
Relieving tackles	1 Q.M.	.	.	.	.	.	Master.
M. braces	1 C.A.G.	.	.	.	.	.	
M. top, do	—	.	.	.	.	1	Forecastle.
Miz. top	—	.	.	.	1	.	Boatswain.
Cross-jack braces	—	.	.	.	.	1	
M. top	—	.	.	1	.	.	
M. mast and H. braces	1 B. M.	.	.	.	.	.	
H. preventer braces	S. Cook.	1	.	.	.	.	
Fore-top	1 C. T.	.	.	.	.	.	
M. preventer braces	—	.	1	1	.	.	
Forecastle	1 B. M.	.	.	.	.	.	

STATIONS.	RATINGS.	OFFICERS.
Magazine	Gunner's Mate, 1 Quarter Gunner, 1 A. G.	Powder Division.
Shell Room	Armorer, 1 A. G.	Passed Midshipman.
Shot Lockers	Captain of Hold	Gunner, in the Magazine.
Store Room	Yeoman	
Pumps	Carpenter's Mate	Carpenter, at the Pumps
Lights	Master-at-Arms	Sailmaker.
Magazine Scuttles	Ship's Corporal and Ship's Steward	

* Shell Guns.

Digitized by Google

QUARTER BILL

OF A SLOOP OF 22 GUNS—Continued.

STATIONS.	RATINGS.	OFFICERS.
	Supply of Battery.	
Fore, Main and After Hatches,—one at each Hatch.....	Sailmaker's Mate, 2 A. G.....	
To pass powder..... (See Art. 131, pp. 22, 23)	W. Room Steward, Cabin Cook... W. Room Cook and 6 A. G.....	
	Surgeon's Steward..... (See Art. 71, P. 12.)	Surgeon's Division. — Surgeon and Assistants. Purser.
Spar Deck.....	2 Sergeants..... 2 Corporals..... 2 Musicians..... 20 Privates.....	Marine Division.

Note.—When required, Marines may be stationed to supply deficiencies at the Great Guns.

Digitized by Google

QUARTER BILL

OF A STEAMER OF THE 1ST CLASS—9 GUNS—COMPLEMENT 300 MEN.

QUARTER DECK.

Captain, 1st Lieutenant, Master, aid to Captain and Captain's Clerk.

No. of gun.	No. of men.	Petty Officers.	F. C.	F. T.	M. T.	A. G.	Watches, and parts of gun's crews. St'rd.	Port.	OFFICERS.
1	16 & boy	1 Q.G. / Arm'r.	4	4	4	3	1st	2d	1st Division.
2	"	1 B. M.	5	4	3	4	2d	1st	Senior Watch Officer, Midshipman.
3	14 & boy	1 C. F.	4	3	3	4	1st	2d	
4	"	1 C. T.	4	3	3	4	2d	1st	1 Quarter Gunner.
5	"	1 C.A.G.	3	3	4	4	1st	2d	2d Division.
6	16 & boy	1 C.T. / 1 B.M.	5	3	3	4	2d	1st	2d Watch Officer, Midshipman. 1 Quarter Gunner.

STATIONS.	P. Officers.	F. C.	F. T.	M.T.	A. G.	OFFICERS.
Conn	1 Q. M.	.	.	.	.	Master's Division.
Wheel	1 Q. M.	1	.	1	1	Quarter Deck.
Signals	1 Q. M.	.	.	.	1	Master.
Reliev. Tackles	1 Q. M. / 1 C. St'd.	.	.	.	1	Forecastle.
M. Braces	1 C.A.G.	.	.	4	8	Boatswain.
M. Prev. Braces	—	.	4	.	.	
Head Braces	1 B. M.	2	1	4	3	Carpenter, at the Pumps.
H. Prev. Braces	—	2	2	.	.	
Main Top	1 C. T.	.	.	3	.	
Fore Top	1 C. T.	.	3	.	.	
Forecastle	1 C. F.	2				
Pumps	1 Carpenter's mate.					

STATIONS.	RATINGS.	OFFICERS.
	Supply of 1st Division.	Powder Division.
Fore Magazine	1 Gunner's Mate, Ship's Steward..	3d Watch Officer, Midshipman. Gunner in the After Magazine. Sailmaker.
Entrance of, do	Cabin Cook	
Patform	Ward R. Cook	
Ladder leading to Orlop, and Orlop	2 Musicians	
Berth Deck	Master of Band	
Ladder of F. Hatch	Ship's Cook, 1 Musician	
	Supply of 2d Division.	
After Magazine	1 Quarter Gunner	
Entrance of, do	Sailmaker's Mate	
Platform	1 Musician	
Ladder leading to Orlop, and Orlop	2 Musicians	
Ward Room	W. Room Steward	
Steerage Ladder	Painter, 1 Musician	
Shell Room	1 Gunner's Mate, 1 Captain Hold, 1 Musician	

Digitized by Google

QUARTER BILL

OF A STEAMER OF THE 1ST CLASS—Continued.

STATIONS.	RATINGS.	OFFICERS.
Shot Locker	1 Captain Hold, 1 Musician	
Lights, Aft	Master-at-Arms	
Forward	Ship's Corporal	
Store Room	Yeoman	
Wings	Carpenter's Mate, Cooper	
		Surgeon's Division.
Cockpit	Surgeon's Steward (See Art. 71, P. 12.)	Surgeon and Assistants. Purser.
		Marine Division.
Spar Deck	3 Sergeants, 3 Corporals, 2 Musicians, 52 Privates	Lieutenant.
		Engineer Division.
To superintend		Chief Engineer.
At each Engine		1 1st Assistant.
Furnace	1 Fireman, and 1 Coal Heaver (at two)	1 2d Assistant (at each.)
Oiling	1 Fireman	
The remainder of the Firemen and Coal Heavers may be stationed to supply deficiencies at the Great Guns, or as small arm men and brace men...		

Note.—The foregoing Quarter Bill applies, particularly, to Steamers of the rig, armament, and internal arrangements of the Powhatan and her class.

Digitized by Google

[APPENDIX B.] (TABLE 1.)

Angles subtended by the Mainmasts of BRITISH *ships of war between the water-line and the truck, and also between the water-line and the cross-trees, at distances expressed in yards, the eye of the observer being placed 20 feet above the level of the water.* (See Art. 237, p. 64.)

Distances.	SHIPS OF THE LINE.				FRIGATES.				SLOOPS.		BRIGS.	
	120 Guns. 3 decks.		From 92 to 80 guns. 2 decks.		50 Guns.		42 Guns.		26 Guns.		16 Guns.	
Yards.	Truck. 208 feet.	Cross trees. 152 feet.	Truck. 198 feet.	Cross trees. 144 feet.	Truck. 176 feet.	Cross-trees. 125 feet.	Truck. 168 feet.	Cross-trees. 120 feet.	Truck. 121 feet.	Cross-trees. 85 feet.	Truck. 125 feet.	Cross trees. 85 feet.
	° ′	° ′	° ′	° ′	° ′	° ′	° ′	° ′	° ′	° ′	° ′	° ′
100	35 53	27 34	34 30	26 16	31 17	23 6	30 4	22 15	22 25	16 2	23 6	16 2
200	19 18	14 19	18 26	13 35	16 29	11 50	15 46	11 22	11 28	8 5	11 50	8 5
300	13 4	9 37	12 27	9 7	11 6	7 55	10 37	7 37	7 40	5 24	7 55	5 24
400	9 52	7 14	9 23	6 51	8 22	5 57	7 59	5 43	5 46	4 3	5 57	4 3
500	7 55	5 47	7 32	5 29	6 42	4 46	6 24	4 35	4 37	3 15	4 46	3 15
600	6 36	4 50	6 17	4 35	5 35	3 58	5 21	3 49	3 51	2 42	3 58	2 42
700	5 40	4 9	5 24	3 56	4 58	3 24	4 35	3 16	3 18	2 19	3 24	2 20
800	4 57	3 38	4 43	3 26	4 12	2 59	4 1	2 52	2 53	2 2	2 59	2 2
900	4 24	3 13	4 12	3 3	3 44	2 39	3 33	2 33	2 34	1 48	2 39	1 48
1000	3 58	2 54	3 57	2 45	3 22	2 23	3 12	2 17	2 19	1 37	2 23	1 37
1100	3 36	2 38	3 26	2 30	3 3	2 10	2 55	2 5	2 6	1 28	2 10	1 28
1200	3 18	2 25	3 9	2 17	2 48	1 59	2 40	1 55	1 56	1 21	1 59	1 21
1300	3 3	2 14	2 54	2 7	2 35	1 50	2 28	1 46	1 47	1 14	1 50	1 14
1400	2 50	2 4	2 42	1 58	2 24	1 42	2 18	1 38	1 39	1 9	1 42	1 10
1500	2 39	1 56	2 31	1 50	2 15	1 35	2 8	1 32	1 32	1 5	1 35	1 5

Digitized by Google

(TABLE 2.)

Angles subtended by the Main Masts of French Ships of War, between the water line and the Truck, and between the water line and the Top-mast Cross Trees, at distances expressed in Yards, the eye of the Observer being placed 20 feet above the level of the water.

DISTANCES.	SHIPS OF THE LINE.						FRIGATES.				CORVETTES.		BRIGS.	
	120 Guns.		90 Guns.		82 Guns.		60 Guns.		44 Guns.		24 Guns.		18 Guns.	
Yards.	220 feet Truck.	158 feet Cross-trees.	201 feet Truck.	151 feet Cross-trees.	192 feet Truck.	138 feet Cross-trees.	188 feet Truck.	139 feet Cross-trees.	168 feet Truck.	121 feet Cross-trees.	120 feet Truck.	85 feet Cross-trees.	112 feet Truck.	77 feet Cross-trees.
100	37°30′	28°31′	34°55′	27°24′	33°38′	24°50′	33°04′	25°27′	30°04′	22°25′	22°15′	16° 2′	20°52′	14°34′
200	20 20	14 51	18 41	14 13	17 54	13 2	17 33	13 7	15 46	11 28	11 22	8 5	10 37	7 20
300	13 48	9 59	12 38	9 33	12 5	8 44	11 51	8 48	10 37	7 40	7 37	5 24	7 6	4 54
400	10 25	7 31	9 32	7 11	9 6	6 34	8 55	6 37	7 59	5 46	5 43	4 3	5 20	3 40
500	8 21	6 1	7 39	5 45	7 18	5 16	7 9	5 18	6 24	4 37	4 35	3 15	4 16	2 56
600	6 59	5 1	6 23	4 48	6 5	4 23	5 58	4 25	5 21	3 51	3 49	2 42	3 34	2 27
700	5 59	4 18	5 28	4 7	5 14	3 46	5 6	3 47	4 35	3 18	3 16	2 19	3 3	2 6
800	5 14	3 46	4 48	3 36	4 35	3 18	4 29	3 19	4 1	2 53	2 52	2 2	2 40	1 50
900	4 39	3 21	4 16	3 12	4 4	2 56	3 59	2 57	3 33	2 34	2 33	1 48	2 23	1 38
1000	4 11	3 1	3 50	2 53	3 40	2 38	3 35	2 39	3 12	2 19	2 17	1 37	2 8	1 28
1100	3 49	2 44	3 29	2 37	3 20	2 26	3 16	2 25	2 55	2 6	2 5	1 28	1 57	1 20
1200	3 30	2 31	3 12	2 24	3 3	2 12	2 59	2 13	2 40	1 56	1 55	1 21	1 47	1 14
1300	3 14	2 19	2 57	2 13	2 49	2 2	2 46	2 2	2 28	1 47	1 46	1 14	1 39	1 8
1400	2 60	2 9	2 44	2 4	2 37	1 53	2 34	1 54	2 18	1 39	1 38	1 10	1 32	1 3
1500	2 48	2 1	2 33	1 55	2 27	1 45	2 24	1 46	2 8	1 32	1 32	1 5	1 26	0 59

Digitized by Google

(TABLE 3.)

Tangent Practice with 8-inch and 32-pdr. Guns, with the charge for distant firing—The line of sight is parallel to the axis of the bore—The point supposed to be struck is in the water line.

Elevation.	Distance.	Height of the parts aimed at, above the water.		Points aimed at.	
				In a French Ship of 82 Guns.	In a French Frigate of 44 Guns.
Degrees.	Yards.	Ft.	In.	8 inch gun of 63 cwt., 1 shell and 9 lbs powder.	
Level.	330	9	0	At upper part of lower ports—Gun deck.	Middle of Gun deck ports.
1	660	43	7	About half way between rail and fore yard.	About midway between water and Main cap.
2	970	108	6	3½ feet below Mizen topmast cross-trees.	Fore topmast cross-trees.
3	1260	207	1	Above Main truck.	
				8 inch gun of 55 cwt, charge 7 lbs. 1 shell.	
Level.	283	7	6	Middle of lower deck port.	Sills of Gun deck ports.
1	579	37	10	10 feet above hammock rail.	About midway between water and Fore cap.
2	689	79	8	Main-top.	A little below Main cap.
3	1148	188	0	Just below Main truck.	Above Main truck.
				32 pdr. of 57 cwt., charge 9 lbs. 1 shot.	
Level.	360	9	0	At upper part of lower deck ports.	Middle of Gun deck ports.
1	760	48	9	About midway between Main cap and water.	Just under Fore yard.
2	1150	129	6	3 feet above Fore topmast cross-trees.	Main topmast cap.
3				Above Main truck.	
				32 pdr. of 27 cwt., charge 4 lbs. 1 shot.	
Level.	250	7	0	Middle of lower deck ports.	Sills of Gun deck ports.
1	545	35	6	About 10 feet above hammock rail.	Midway between water and Main top.
2	800	90	9	Main cap.	6 feet above Main cap.
3	1047	171	6	Head of Main top-gallant rigging.	Main truck.

Note.—This mode of firing presents serious disadvantages; the points aimed at have often to be estimated as well as the distance of the enemy's vessel, the class of which can seldom be accurately determined; the men are taught to aim where they are not expected to hit, and the chances of the ricochet are lost; hence tangent firing should only be resorted to when there are no other means of regulating the elevation of the guns. The spars of English ships are rather less than those of French ships of the same class.

Digitized by Google

APPENDIX C.

FORM (1.)

Report of an Inspection of the U. S. S. ( ) ( ) Commanding, made by (,) the Commander of the Station or Senior Officer present, this ( ) day of ( ) 18 , at ( )

1. Date of last inspection.
2. Dates of target practice since last inspection.
3. Time of beating to quarters.
4. Time that the divisions reported ready for action.
5. Whether all the divisions were found to be properly prepared.
6. If any of the preparations are defective, and in what particulars.
7. Whether the men are well trained in the exercise of their guns, and especially in pointing them.
8. Whether the men are well trained for securing masts and spars in case of loss or injury to shrouds and stays.
9. Whether the men are well trained in passing powder from the magazines and thence to the guns.
10. Whether there was any target firing during the inspection; if there was, make special report of it, according to form 2.
11. Whether the men are well trained in small arm exercises, and in firing.
12. Whether the Boarders or others, are trained in single stick or broad sword exercises.
13. The condition of the boats when armed for service.
14. Whether the boat's crews are expert in the management of the boat and field guns, and in embarking and debarking the guns, equipments and ammunition.
15. Time required to shift a carriage on the gun deck.
16. " " on the spar deck.
17. " to shift breechings.
18. " to shift a gun from one side to the other, ready for firing.
19. Whether the arrangements for boarding and repelling boarders are good or otherwise.

Digitized by Google

FORM (1.)—Continued.

20. Whether the arrangements for extinguishing fires are good or otherwise.
21. The general condition of the vessel, armament and crew for efficient service in action.

Note.—When practicable, these inspections are to be made before a ship proceeds to sea, when commissioned, and before she is paid off on her return, and semi-annually during the cruise.

Digitized by Google

FORM (2.)

Report of target practice on board the U. S. Ship ( ), ( ) Commanding, with cannon and shell guns.

Date.	
At anchor, or underway.	
Distance of target in yards.	
Size of target.	
Number of guns fired, and their calibre.	
Charges of powder.	
Number of discharges with shot. . . .	
" " " shells.	
No. which hit the target, of shot. . .	
" " " " of shells. .	
General result as to accuracy. . . .	
Intended time of burning of fuzes. .	
No. of shells which burst, at or near the proper time.	
" " " too soon, and when.	
" " " not at all. . . .	
How many primers missed fire. . . .	
How many of the firings were "direct."	
" " " " "ricochet."	
State of surface of water.	
Position of target, to windward or leeward.	
Time occupied between the first and last fires.	
Did the the elevation of the sight prove to be correct for the charge and distance, if not, how erroneous. . .	
Rolling motion, in strakes of plank. .	
FOR MUSKETRY AND PISTOLS.	
Kind of arm used.	
No. of men who fired *singly with deliberate aim.*	

Digitized by Google

FORM (2.)—Continued.

No. of discharges made in the course of the exercise.	
Distance of target.	
Size of target.	
No. of balls that hit the target. . . .	
No. within 6 inches of bull's eye. . .	
FIRING BY VOLLIES AND BY COMMAND.	
Distance of target.	
Size of target.	
Number in each volley.	
No. of balls which hit the target. . .	
" " within 6 inches of bull's eye. .	

Signed ( )
Captain.

These reports are to be forwarded to the Bureau of Ordnance and Hydrography by the first opportunity after the firings have been made.

Digitized by Google

TABLE OF ALLOWANCES

OF

ORDNANCE EQUIPMENTS

AND STORES,

FOR A

THREE YEARS CRUISE.

Digitized by Google

ARMAMENTS.

The *guns* for each vessel will be designated by a special order from the Chief of the Bureau of Ordnance and Hydrography.

Digitized by Google

ARTICLES.	PROPORTION TO EACH GUN.	SHIPS OF THE LINE.		RAZEES.	FRIGATES.		SLOOPS OF WAR.			BRIGS.	STEAMERS.		
		Three decks.	Two decks.		First class.	Second class.	First class.	Second class.	Third class.		First class.	Second class.	Third class.
AMMUNITION.													
Caps, percussion, for small arms - - No.	–	113,400	88,200	50,400	44,100	37,800	25,200	25,200	18,900	12,600	31,500	25,200	
Cartridges, musket, ball - - - "	–	30,000	20,000	9,000	9,000	6,000	5,000	4,000	2,000	2,000	4,000	4,000	
" " blank - - - "	–	4,000	3,000	2,000	2,000	2,000	1,000	1,000	1,000	1,000	2,000	2,000	
" carbine ball - - - "	–	9,000	8,000	5,000	5,000	5,000	4,000	3,000	3,000	2,000	6,000	4,000	
" pistol ball - - - "	–	14,000	11,000	7,000	6,000	5,000	4,000	3,000	2,000	1,000	3,000	2,000	
Fixed ammunition, for "boat and field howitzers." — Shrapnel.	rounds. 90												
Fixed ammunition, for "boat and field howitzers." — Shells.	" 36												
Fixed ammunition, for "boat and field howitzers." — Canister.	" 54												
Fuzes, in metal stocks, spare. — in equal proportions of 5″, 10″, and 15″.	No. –	540	360	270	240	180	135	112	60	25	300	300	
" assorted — for shrapnel and shells for "boat and field howitzers."	" 830												
Grape, stands, for each gun - - - "	–	4	4	4	4	4	8	8	8	8	8	8	
Powder, cannon, - - - - - rounds	100												
" priming - - - - - lbs.	–	1,400	1,100	800	750	700	350	350	300	100	500	500	
" of inferior quality, for salutes, and practice without shot.	–	As directed by Bureau of Ordnance according to station and length of cruise.											
Primers - - - - - - No.	300												
" for "boat and field howitzers" - "	360												

Digitized by Google

ORDNANCE EQUIPMENTS AND STORES—CONTINUED.

ARTICLES.		PROPORTION TO EACH GUN.	SHIPS OF THE LINE.		RAZEES.	FRIGATES.		SLOOPS OF WAR.			BRIGS.	STEAMERS.		
			Three Decks.	Two decks.		First class.	Second class.	First class.	Second class.	Third class.		First class.	Second class.	Third class.
Spur-tubes - - - - - - - -	No.	50												
Shells, in boxes saboted and fuzed, one-half to be loaded	for each cannon "	–	4	4	4	4	4	4	4	4	4	40	40	
" in boxes, saboted and fuzed, one-half to be loaded	for shell guns. "	40												
" In shot lockers—bouched only	- -	44												
Shot, solid, for each cannon - - -	"	–	80	80	80	80	80	76	76	76	76	60	60	
ARMS—EQUIPMENTS AND SPARE PARTS.														
Axes, battle - - - - - - -	No.	1												
Carbines - - - - - - -	"	–	120	110	70	70	70	54	42	42	20	80	60	
" ball moulds - - - - -	"	–	1	1	1	1	1	1	1	1	1	1	1	
" boxes and belts - - - -	"	–	120	110	70	70	70	54	42	42	20	80	60	
" cone-picks - - - - -	"	–	120	110	70	70	70	54	42	42	20	80	60	
" cones (spare) - - - - -	"	–	7	7	4	4	4	3	3	3	2	4	4	
" screw-driver and cone-keys -	"	–	11	10	7	7	7	5	4	4	2	8	8	
" wiper-rods - - - - -	"	–	11	10	7	7	7	5	4	4	2	8	8	
Muskets, with bayonets, scabbards & frogs	"	–	400	270	120	120	75	60	50	30	20	54	54	
" ball-moulds - - - - -	"	–	1	1	1	1	1	1	1	1	1	1	1	

NOTE.—All Fireworks, Ball and Blank Cartridges for Small Arms, Fixed Ammunition for "Boat and Field Howitzers," Fuzed Shells, Fuzes, Primers, Spur-tubes, and Percussion Caps, will be furnished in appropriate packages and properly labelled.

Digitized by Google

ORDNANCE EQUIPMENTS AND STORES—CONTINUED.

ARTICLES.		PROPORTION TO EACH GUN.	SHIPS OF THE LINE.		RAZEES.	FRIGATES.		SLOOPS OF WAR.			BRIGS.	STEAMERS.		
			Three decks.	Two decks.		First class.	Second class.	First class.	Second class.	Third class.		First class.	Second class.	Third class.
Muskets, ball-screws and wipers	No.	–	40	27	12	12	8	6	5	4	3	5	5	
" bands, upper, lower and middle (spare)	"	–	10	8	6	6	3	4	4	4	4	4	4	
" bayonets and scabbards (spare)	"	–	20	14	8	8	5	4	4	4	4	6	6	
" boxes, and belts	"	–	400	270	120	120	75	60	50	30	20	54	54	
" breech-screws (spare)	"	–	6	5	3	3	2	2	2	2	2	2	2	
" cartridge formers	"	–	2	2	2	2	2	2	2	2	2	2	2	
" hammers (spare)	"	–	20	14	6	6	5	4	4	4	3	4	4	
" cones (spare)	"	–	40	27	12	12	8	6	6	5	4	6	6	
" cone picks	"	–	400	270	120	120	75	60	50	30	20	54	54	
" guard-screws (spare)	"	–	20	14	6	6	5	4	4	4	3	4	4	
" hand-vice (spring)	"	–	17	13	6	6	5	4	3	3	2	4	4	
" locks (spare)	"	–	6	5	3	3	2	2	2	2	2	2	2	
" lock-screws, small (spare)	"	–	100	75	30	30	20	15	12	10	10	12	12	
" screw-drivers and cone-keys	"	–	40	27	12	12	8	6	5	4	4	6	6	
" side screws (spare)	"	–	40	27	12	12	8	6	5	4	4	6	6	
" springs, band, battery, main and sear, of each (spare)	"	–	20	14	6	6	4	4	4	4	4	4	4	
" tang-screws (spare)	"	–	20	14	6	6	4	4	4	4	4	4	4	
" triggers	"	–	6	5	3	3	2	2	2	2	2	2	2	
" wire and tumbler-punches	"	–	20	14	6	6	4	3	3	2	2	3	3	
" worms and scrapers	"	–	20	14	6	6	4	3	3	2	2	3	3	
Pistols, with frog for belt	"	–	360	270	186	140	136	90	70	60	35	80	60	
" ball-moulds	"	–	1	1	1	1	1	1	1	1	1	1	1	
" cartridge formers	"	–	2	2	2	2	2	2	2	2	2	2	2	
" cones (spare)	"	–	25	20	12	12	10	6	6	5	4	6	6	

Digitized by Google

ORDNANCE EQUIPMENTS AND STORES—CONTINUED.

ARTICLES.		PROPORTION TO EACH GUN.	SHIPS OF THE LINE.		RAZEES.	FRIGATES.		SLOOPS OF WAR.			BRIGS.	STEAMERS.		
			First class.	Second class.		First class.	Second class.	First class.	Second class.	Third class.		First class.	Second class.	Third class.
ARMS, &c.														
Pistols, screw drivers and cone-keys	No.	–	15	11	6	6	5	4	4	3	2	4	4	
" worms and scrapers	"	–	15	11	6	6	5	4	4	3	2	4	4	
Pikes	"	–	350	300	200	200	150	100	100	80	50	100	100	
Swords, with scabbards, belts and frogs	"	–	360	270	190	150	140	86	75	70	35	100	80	
Anvils	"	1/100	1	1	1	1	1	1	1	1	1	2	2	
Aprons, brass, for locks and sights	sets	1/10	As required											
Arm-chests	No.	–	48	36	18	18	18	12	12	10	6	12	12	
Awls, shoemaker's	"	–	3	3	2	2	2	2	2	2	2	2	2	
" wire	"	–	10	10	10	10	10	10	5	5	3	5	5	
Axes, wood	"	–										2	2	
Beds, for truck carriages only	"	2/10	1	1	1	1	1	1	1	1	1	2	2	
Bellows	"	–	1	1	1	1	1	1	1	1	1	1	1	
Blank-books and returns	sets	–												
Blocks, gun-tackle, double	"	2/10												
" " single	"	4/10												
Bolts, pivot for pivot guns, heavy, spare	"	1												
" " " slides for light guns, spare	"	2/10												
Borax	lbs.	–	12	10	5	5	4	3	3	3	2	10	10	
Boring-bitts	No.	1												
" for boat and field howitzer	"	2												
Boxes, division, "Supply" and "Reserve"	"	–	One of each to each division.											

Digitized by Google

ARTICLES.		PROPORTION TO EACH GUN.	SHIPS OF THE LINE.		RAZEES.	FRIGATES.		SLOOPS OF WAR.			BRIGS.	STEAMERS.		
			Three decks.	Two decks.		First class.	Second class.	First class.	Second class.	Third class.		First class.	Second class.	Third class.
Boxes, passing, for ship guns	No.	$1\frac{6}{10}$												
" " for boat and field howitzers	"	12												
" primer	"	1												
Braces and bitts	sets	–	2	2	2	2	2	1	1	1	1	2	2	
Brass, sheet	lbs.	–	15	12	8	8	6	3	3	3	1	8	8	
Breechings, fitted for guns mounted on truck carriages	No.	2												
Breechings, fitted for guns mounted on friction carriages	"	1												
Bricks, Bath	"	–	300	240	140	140	120	80	80	60	40	80	80	
Bristles	oz.	–	15	12	9	9	8	6	6	6	3	6	6	
Brushes, scrubbing	No.	–	60	40	30	30	30	18	18	15	12	12	12	
Buckets, fire, with laniards	"	1												
Buckets, shot	"	–	4	4	2	2	2							
Callipers, (smith's)	"	–	2	2	2	2	2	1	1	1	1	2	2	
Camphor	lbs.	–	8	8	6	6	4	3	3	3	2	3	3	
Carriages, complete	No.	1												
Carriages, boat howitzer, complete	No.	1												
" field " "	"	1												
" spare, in parts, for stowage for each class of guns above 33 cwt. mounted on truck carriages	No.	–	1	1	1	1	1	1	1	1	1	1	1	
Cartridge bags, spare, colors proportioned as when filled	"	–	1,000	1,000	500	500	200	200	200	150	50	100	100	

Digitized by Google

ORDNANCE EQUIPMENTS AND STORES—CONTINUED.

ARTICLES.		PROPORTION TO EACH GUN.	SHIPS OF THE LINE.		RAZEES.	FRIGATES.		SLOOPS OF WAR.			BRIGS.	STEAMERS.		
			Three decks.	Two decks.		First class.	Second class.	First class.	Second class.	Third class.		First class.	Second class.	Third class.
Cartridge-paper	reams	–	3	3	2	2	2	1	1	1	1/2	2	2	
Catgut, large	skeins	–	15	12	9	9	8	5	5	4	3	15	15	
Charcoal	bush.	–	As re	quired	and	with	refere	nce to	stowa	ge.				
Charger, copper, (4 oz.) for shrapnel for boat and field howitzer	No.	1												
Chocks, shifting, two to each traversing pivot carriage	"													
Cold-chisels	"	–	30	24	15	15	15	12	12	10	9	15	15	
Compasses, (armorer's)	"	–	3	3	2	2	2	2	2	2	1	3	3	
Compressors, for light guns mounted on friction carriages, spare	"	–	One to	each	class	of vess	els req	uiring	them.					
Crocus martis	lbs.	–	9	9	6	6	6	3	3	3	2	6	6	
Dies, letters and figures ¾ inch	sets	–	1	1	1	1	1	1	1	1	1	1	1	
Dismounting apparatus (Griolet)	No.	–	One to	each	vessel	having	a cove	red bat	tery.					
Dividers	"	–	1	1	1	1	1	1	1	1	1	1	1	
Drills	sets	–	2	2	2	2	2	1	1	1	1	2	2	
" stock press	No.	–	2	2	2	2	2	1	1	1	1	2	2	
Drums, complete { bass	No.	–	1	1	1	1	1					1		
Drums, complete { tenor	"	–	3	3	2	2	2	1	1	1	1	2	2	
Drumheads, { bass	"	–	6	6	6	6	6					6		
Drumheads, { tenor	"	–	24	24	16	16	16	8	8	8	8	16	16	
" snares	"	–	4	4	3	3	3	1	1	1	1	3	3	
Drying stoves	"	–	24	18	12	12	10	8	8	6	4	8	8	
Emery, assorted	lbs.	–	15	12	9	9	9	6	6	4	3	9	9	
Elevators for supplying powder	No.	–	8	8	4	4	4							

Digitized by Google

ORDNANCE EQUIPMENTS AND STORES—CONTINUED.

ARTICLES.		PROPORTION TO EACH GUN.	SHIPS OF THE LINE.		RAZEES.	FRIGATES.		SLOOPS OF WAR.			BRIGS.	STEAMERS.		
			Three decks.	Two decks.		First class.	Second class.	First class.	Second class.	Third class.		First class.	Second class.	Third class.
Fearnaught	yds.	–	20	20	10	10	5	5	5					
Felt, sheathing (for stopping shot holes)	sheets	–	30	30	20	20	15	15	15	10	10	20	20	
Fifes	No.	–	3	3	2	2	2	1	1	1	1	2	2	
Files, flat, (bastard)	"	–	35	30	18	18	15	9	9	8	6	18	18	
" flat, (fine)	"	–	35	30	18	18	15	9	9	8	6	18	18	
" four-sided	"	–	12	12	7	7	6	5	5	4	2	7	7	
" half-round	"	–	35	30	18	18	15	9	9	8	6	18	18	
" half-round (bastard)	"	–	35	30	18	18	15	9	9	8	6	18	18	
" three-sided	"	–	12	12	7	7	6	5	5	4	2	7	7	
" rat-tail	"	–	6	6	4	4	3	3	3	3	2	4	4	
Fireworks, viz :														
Blue lights - with 2 cups for vessels of all classes	"	–	120	120	90	90	60	50	50	50	30	90	90	
False fires - with 2 cups for vessels of all classes	"	–	120	120	90	90	60	50	50	50	30	90	90	
Portfires - with 2 cups for vessels of all classes	"	–	100	100	50	50	50	30	30	30	20	50	50	
Rockets, signal, with staves	"	–	100	100	50	50	40	30	30	30	10	50	50	
Flashpan	"	–	1	1	1	1	1	1	1	1	1	1	1	
Flasks, powder	"	¼												
Forges, complete	"	–	1	1	1	1	1	1	1	1	1	2	2	
Funnels, copper, (for filling shells for boat howitzer)	"	1												
Gauges, shot	sets	–	One	to each	calibre									
Glass, thick plates	"	–	One	half	set to	each	battle	lantern, cut to fit.						
Grapnels for bouys	No.	–	2	2	2	2	2	2	2	2	2	2	2	
Grapnels for boats, 2 for each boat, *small*	"													

Digitized by Google

ORDNANCE EQUIPMENTS AND STORES—CONTINUED.

ARTICLES.		PROPORTION TO EACH GUN.	SHIPS OF THE LINE.		RAZEES.	FRIGATES.		SLOOPS OF WAR.			BRIGS.	STEAMERS.		
			Three decks.	Two decks.		First class.	Second class.	First class.	Second class.	Third class.		First class.	Second class.	Third class.
Grommets, shot	No.	1												
Grubbing-hoe and pick-axe, combined	"	–	3	3	3	3	3	3	3	3	1	3	3	
Gunnery, treatise on naval	"	–	1	1	1	1	1	1	1	1	1	1	1	
Hammers, claw	"	–	2	2	2	2	2	1	1	1	1	2	2	
" hand	"	–	3	3	3	3	3	2	2	2	2	4	4	
" rivetting	"	–	3	3	3	3	3	2	2	2	2	4	4	
" saddler's	"	–	2	2	2	2	2	1	1	1	1	2	2	
" sledge, assorted	"	–	3	3	3	3	3	2	2	2	2	4	4	
" tinner's	"	–	3	3	3	3	3	2	2	2	2	4	4	
Handspikes,	"	2½												
Hardies	"		2	2	2	2	2	2	2	2	2	4	4	
Haversack (boat and field howitzer)	"	1												
Housing chocks, for lower deck guns	"	2												
Iron, bar, assorted	lbs.	–	1,400	1,200	800	800	700	500	500	400	300	800	800	
" nail rods	"	–	200	150	100	100	90	80	80	70	40	100	100	
Iron, round	"	–	1,600	1,400	1,000	1,000	800	600	600	500	400	1,000	1,000	
" spike-rods	"	–	200	150	100	100	90	80	80	70	40	100	100	
" thimble	"	–	60	50	40	40	30	20	20	20	16	40	40	
" wire	"	–	36	30	18	18	15	9	9	8	6	18	18	
Irons, hand	No.	–	250	250	200	175	150	75	75	60	50	150	150	
" leg	"	–	250	250	200	175	150	75	75	60	50	150	150	
Knives, shoe	"	–	6	6	6	6	6	3	3	3	2	6	6	
Lacker, for bright parts of small arms and compressors of friction carriages	galls.	–	10	8	6	6	5	5	5	5	3	5	5	
Ladles, for boat and field howitzer	No.	1												

Digitized by Google

ORDNANCE EQUIPMENTS AND STORES—CONTINUED.

ARTICLES.	PROPORTION TO EACH GUN.	SHIPS OF THE LINE.		RAZEES.	FRIGATES.		SLOOPS OF WAR.			BRIGS.	STEAMERS.		
		Three decks.	Two decks.		First class.	Second class.	First class.	Second class.	Third class.		First class.	Second class.	Third class.
Ladles, for guns in battery - - - No.	1 2/5												
" casting - - - - - - "	–	2	2	2	2	2	1	1	1	1	1	1	
Laniards, port - - - - - - "	4												
Lanterns, battle, (none on spar decks) - "	1												
" dark - - - - - - "	–	8	6	4	4	4	2	2	2	2	2	2	
Lashings, breast and muzzle, each - - "	1												
Lead, black, pulverized - - - - lbs.	–	30	24	12	12	10	6	6	5	3	5	5	
" pig - - - - - - - "	–	260	200	120	120	100	80	75	67	40	120	120	
" sheet 1/8 thick - - - - sq. ft.	–	48	48	48	48	40	40	40	40	30	80	80	
Linch-pins, spare - - - - - No.	1 1/6												
Locks, cannon, with strings and toggles complete - - - - - - "	1 1/4												
Locks, cannon, with string and toggle, for boat and field howitzer - - - "	1												
Lock string, spare - - - - - fath.		300	250	150	100	50	50	50	40	20	30	30	
" screws and nuts, spare - - "	1												
Leather, buff - - - - - skins	–	5	5	2	2	2	1	1	1	1	1	1	
" bellows - - - - - sides	–	10	9	6	6	5	3	3	3	2	6	6	
MAGAZINE AND LIGHT-ROOM IMPLEMENTS.													
Adze, copper - - - - - No.		One for each magazine.											
Brushes, dusting - - - - - "	–	Two for each magazine.											
" paint, for cleaning tanks - -	–	Two for each magazine.											

Digitized by Google

ORDNANCE EQUIPMENTS AND STORES—CONTINUED.

ARTICLES.	PROPORTION TO EACH GUN.	SHIPS OF THE LINE.		RAZEES.	FRIGATES.		SLOOPS OF WAR.			BRIGS.	STEAMERS.		
		Three decks.	Two decks.		First class.	Second class.	First class.	Second class.	Third class.		First class.	Second class.	Third class.
Buckets, copper-bound - - - - No.	–	One	for each magazine.										
Cans, water, copper-bound - - - "	–	Two	to each magazine and shell room.										
Dresses and magazine shoes - - no. & pairs.	–	12	11	10	10	10	4	4	4	2	6	6	
Dust-pan, copper - - - - - No.	–	One	for each magazine.										
Formers, for cutting cartridge bags - sets.	–	One to each calibre and class of guns.											
Funnels, copper, for filling cartridge bags No.	–	One to each magazine.											
" " small, for filling shells - "	–	One to each shell room.											
Hose, with copper pipe - - - - "	–	One to each magazine.											
Knives, copper - - - - - - "	–	One to each magazine.											
Lamp-feeders, tin - - - - - "	–	One to each light-room.											
Lanterns, copper, with lamp complete - "	–	One to each light-room.											
Measures, copper, to suit charges - - sets.	–	One to each magazine and shell room.											
Scissors, lamp, steel, (kept in light-room) No.	–	One to each light room.											
Scoops, copper - - - - - - "	–	One to each magazine.											
Screens, baize, - - - - - - "	–	Two to each magazine, when requisite.											
Tanks, powder, - - - - - - "	–	A sufficient number of each size to stow the powder in cartridge bags to the best advantage.											
Tank-screws, (spare) - - - - No.	–	One to ten tanks.											
Vice, copper - - - - - - "	–	One to each magazine.											
Mallets, tinners' - - - - - - "	–	2	2	2	2	2	2	2	2	1	2	2	
Marlinspikes - - - - - - "	–	24	18	12	12	10	6	6	6	4	6	6	
Match-rope - - - - - - lbs.	–	250	200	150	150	150	100	100	100	75	100	100	
Match-staves - - - - - - No.	⅓									50			
Muslin for targets, cheap, ¾ wide - - yds.	–	100	100	100	100	100	70	70	70		70	70	
Muzzle-bags - - - - - - No.	1												

Digitized by Google

ARTICLES.		PROPORTION TO EACH GUN.	SHIPS OF THE LINE.		RAZEES.	FRIGATES.		SLOOPS OF WAR.			BRIGS.	STEAMERS.		
			Three decks.	Two decks.		First class.	Second class.	First class.	Second class.	Third class.		First class.	Second class.	Third class.
Oil, sweet, in tinned copper vessels	galls	–	12	9	6	6	6	3	3	3	2	3	3	
Padlocks, brass	No.	–	9	9	6	6	6	4	4	4	3	6	6	
Pincers	"	–	4	4	3	3	2	2	2	2	2	4	4	
Pins (for breeching shackles)	"	1/4												
Pliers, assorted	"	–	4	4	3	3	2	2	2	2	2	4	4	
Portfire-staves	"	–	2	2	2	2	2	2	2	2	2	2	2	
Port-pendants, chain (lower deck)	"	2												
Priming wires	"	2												
" " for boat and field howitzer	"	2												
Punches, for shackle-pins, and for breechings	"	1/10												
" assorted, armorers	"	–	24	18	12	12	12	6	6	6	6	12	12	
Putty	lbs.	–	300	200	150	150	130	100	100	75	40	75	75	
Quoins, ordinary, spare	No.	1/10												
" Ward's, screw	"	1	For	chase	and	shell	guns	only.						
Quoins, chocking, for truck carriages only	"	2												
Rammers, adapted to chamber if any	"	1												
" heads (spare)	"	–	12	9	6	6	4	3	3	3	3	4	4	
" staves (spare)	"	–	6	4	3	3	3	2	2	2	2	3	3	
Rammer and sponge, complete with cover, on same staff { for boat howitzer }	"	2												
Rasps, assorted	"	–	12	9	6	6	6	3	3	3	3	6	6	

Digitized by Google

ORDNANCE EQUIPMENTS AND STORES—CONTINUED.

ARTICLES.		PROPORTION TO EACH GUN.	SHIPS OF THE LINE.		RAZEES.	FRIGATES.		SLOOPS OF WAR.			BRIGS.	STEAMERS.		
			Three decks.	Two decks.		First class.	Second class.	First class.	Second class.	Third class.		First. class.	Second class.	Third class.
Rattles, for calling boarders	No.	–	Two	to each	division	of	guns.							
Riveting tools	"	–	4	4	3	3	2	2	2	2	2	2	4	
Sabots, for shells, bouched only	"	44												
" for shell guns														
Sal ammoniac	lbs.	–	3	3	2	2	2	1	1	1	1	2	2	
Sand-paper	sheets	–	200	150	75	75	75	60	60	60	36	100	100	
Saws, hack	No.	–	9	9	6	6	6	3	3	2	2	6	6	
Scissors	"	–	2	2	2	2	2	1	1	1	1	2	2	
Scrapers, gun, half only fitted with handles	"	1/10	-	-	-	-	-	-	-	1	1	1	1	
" to fit on rammer head	"		2	2	1	1	1	1	1	1	1	1	1	
Screws, compressing, for pivot guns, spare	"	1												
" elevating, spare	"	1/10	For	guns	so	fitted								
" " for boat and field howitzer, spare	"	1												
Screw-plates and taps, large	"	–	2	2	2	2	2	1	1	1	1	2	2	
" " small	"	–	2	2	2	2	2	1	1	1	1	2	2	
" " fuze	"	–	1	1	1	1	1	1	1	1	1	1	1	
Selvagees and heavers for securing breeching	"	2												
Shears, hand	"	–	2	2	2	2	1	1	1	1	1	2	2	
" sheep	"	–	4	4	3	3	3	2	2	2	2	2	2	
" tinner's	"	–	2	2	1	1	1	1	1	1	1	1	1	

Digitized by Google

ARTICLES.		PROPORTION TO EACH GUN.	SHIPS OF THE LINE.		RAZEES.	FRIGATES.		SLOOPS OF WAR.			BRIGS.	STEAMERS.		
			Three decks.	Two decks.		First class.	Second class.	First class.	Second class.	Third class.		First class.	Second class.	Third class.
Sights, breech and reinforce, each	No.	$1\frac{1}{10}$	One sp	are of e	ach for	each cl	ass of g	uns of	vessels	mount'g	less t	han 10	guns of	a class.
" " for boat and field howitzer	"	2	Long	and s	hort.									
" trunnion, for distant firing, pivot guns	"	1												
Sight-thumb-screws (spare)	"	1												
Slings, gun (chain)	"	–	2	2	2	2	2	1	1	1	1	1	1	
Solder, brass	lbs.	–	10	9	3	3	3	1	1	1	1	6	6	
" pewter	"	–	60	50	30	30	25	10	10	10	5	20	20	
Soldering-irons	No.	–	4	4	2	2	2	1	1	1	1	2	2	
Spades		–	10	10	8	8	8	6	6	6	4	6	6	
Sponges, bristle, adapted to the bore,														
" complete	"	$1\frac{2}{10}$										2	2	
" wire, adapted to the chamber if any, complete	"	$1\frac{1}{10}$										2	2	
" woolen-wove, adapted to the chamber, if any, complete	"	$1\frac{3}{10}$												
" woolen-wove, adapted to the bore of chambered guns, complete	"	–	2 to	each	deck.									
Sponges, woolen-wove, without staves or heads	"	$\frac{1}{2}$												
Spring-spikes for vents, boat howitzer	"	2												
Stakes, iron	"		1	1	1	1	1	1	1	1	1	1	1	
" tinners' edging	"	–	1	1	1	1	1	1	1	1	1	1	1	
" planishing	"	–	1	1	1	1	1	1	1	1	1	1	1	

Digitized by Google

ORDNANCE EQUIPMENTS AND STORES—CONTINUED.

ARTICLES.	PROPORTION TO EACH GUN.	SHIPS OF THE LINE.		RAZEES.	FRIGATES.		SLOOPS OF WAR.			BRIGS.	STEAMERS.		
		Three decks.	Two decks.		First class.	Second class.	First class.	Second class.	Third class.		First class.	Second class.	Third class.
Steel, (assorted) - - - - - - lbs.	–	200	150	100	100	80	50	50	40	10	100	100	
Stone, rotten - - - - - - "	–	10	9	6	6	6	3	3	3	2	6	6	
Straps, tin, for sabots - - - - No.	–	One	set for	each	shell	*bouched only.*							
Squares, iron - - - - - - "	–	2	2	2	2	2	1	1	1	1	2	2	
Tacks, iron - - - - - - "	–	2,000	2,000	1,000	1,000	1,000	500	500	500	500	500	500	
Tacks, copper - - - - - - "	–	2,000	2,000	1,000	1,000	1,000	500	500	500	500	500	500	
Tackles, gun, complete - - - - "	3												
" " spare - - - - "	1												
" port, (lower deck) - - - "	2												
Thread, shoe - - - - - - lbs.	–	6	4	4	4	3	3	3	3	2	3	3	
Thrumbs, coarse woolen, yarn - - "	–	6	5	3	3	2	$1\frac{1}{2}$	$1\frac{1}{2}$	$1\frac{1}{2}$	1	2	2	
Thumbstalls, buff leather, hair-stuffed No.	2												
Tin - - - - - - - - sheets	–	250	200	100	100	100	60	60	60	50	100	100	
Tongs, (assorted) armorer's - - No.	–	6	6	5	4	4	4	4	4	4	8	8	
" shot - - - - - - "	–	2	2	2	2	1	1	1	1	-	2	2	
Tompions, with wads and laniards - "	1												
Trail-rope for boat and field howitzer - "	1												
Trucks, wooden, spare - - - - "	$1\frac{2}{0}$										2	2	
" transporting - - - - sets	–		One for	each	class	of guns	mounted	on	friction	carriages.			
Tubs, division, to contain from 20 to 30 gallons each - - - - - "	$1\frac{1}{0}$										2	2	
Vent drills, with box and bow - - sets	$1\frac{1}{0}$								1	1	1	1	
Vent punches - - - - - - "	$1\frac{2}{0}$								2	2	2	2	
Vices, bench, large - - - - "	–	1	1	1	1	1	1	1	1	1	2	2	

Digitized by Google

ORDNANCE EQUIPMENTS AND STORES—CONTINUED.

ARTICLES.	PROPORTION TO EACH GUN.	SHIPS OF THE LINE.		RAZEES.	FRIGATES.		SLOOPS OF WAR.			BRIGS.	STEAMERS.		
		Three decks.	Two decks.		First class.	Second class.	First class.	Second class.	Third class.		First class.	Second class.	Third class.
Vices, bench, small - - - - - sets	–	1	1	1	1	1	1	1	1	1	1	1	
Wads, selvagee, cut - - - - - "	80												
" junk - - - - - - - "	5												
Wick, cotton - - - - - lbs.	–	6	6	6	6	6	4	4	4	3	4	4	
" woven, (when required) - - No.	–	1 gross	to a	lamp.									
Wire, brass - - - - - lbs.	–	12	9	6	6	4	2	2	2	1	3	3	
Worms - - - - - - No.	$\frac{3}{10}$								3	2	3	3	
Wrenches, fuze - - - - - "	$\frac{3}{10}$								2	2	4	4	
" screw, patent - - - - "	–	1	1	1	1	1	1	1	1	1	1	1	
Yarn, worsted, fine - - - - lbs.	–	7	6	4	3	3	2	2	$1\frac{1}{2}$	1	2	2	

The allowances of vessels of classes not specified in the foregoing tables, will be regulated by special orders from the Chief of the Bureau of Ordnance and Hydrography.

Digitized by Google

Digitized by Google

FORM

OF

EXERCISE AND MANŒUVRE

FOR THE

BOAT-HOWITZERS OF THE U. S. NAVY.

BY

LIEUT. J. A. DAHLGREN,

ASSISTANT INSPECTOR OF ORDNANCE.

PHILADELPHIA:

PRINTED BY A. HART,

126 CHESTNUT STREET.

1852.

Digitized by Google

NOMENCLATURE.

THE CASCABEL is the part of the gun in the rear of the base ring; it is composed of:—

(*a*). The breech plate.
(*b*). The knob.
(*c*). The neck.

(*d*). Base ring.
(*e*). Cylinder.
(*f*). Chase.
(*g*). Loop, with hole for bolt.
(*h*). Lock lugs.
(*i*). Lip for elevator.
(*j*). Muzzle-sight.
(*k*). Mass for breech-sight.

The BORE includes all the part bored out, viz.:—

Cylinder of bore.
Chamber.

These guns should not be rubbed bright, which might render it difficult to point them with a bright sun.

Digitized by Google

Plate 1.

Boat Howitzer.

U.S.Navy.

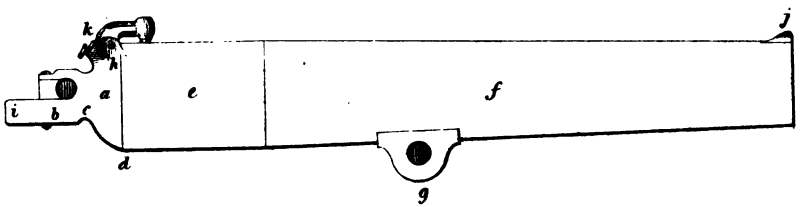

P. S. Duval & Co's St Lith Press Phila

Digitized by Google

Digitized by Google

BOAT-CARRIAGE.

—— Bed.
—— Slide.
—— Compressor plate.
—— " bolts.
—— " handles.
—— Lugs for loop.

FIELD-CARRIAGE.

—— Axle.
—— Trail.
—— Braces.
—— Lugs for loop.
—— Trail wheel or runner.
—— Bolt for do.
—— Socket for handspike.
—— Elevator.
—— Disc of elevator.
—— Box for elevator.

Digitized by Google

EXERCISE OF THE BOAT-HOWITZER.

WHILE preparations are in progress for clearing out the boats, the officer of the boat will see that the howitzer, and its various equipments, are also got in readiness. The junior officer or officers of the piece will attend to the gun itself and its carriages.

The quarter-gunner will have the ammunition got up from below; also the lock, sights, sponges, spare fuzes, ammunition-pouches, primers, &c. (Breeching, if deemed necessary.)

This will be the proper occasion for charging the shrapnell and shells with powder, which should receive the particular attention of the officer who is to command the boat.

The captain of the gun will look after the traverses, tracks, pivot-plates, &c.

The coxswain will have ready the thwarts, oars, masts, sails, &c.

When the boat has been cleared for hoisting out, lay the thwarts and traverses, bolt the pivot-plates on the bows and quarters; if the stem and stern pivot-plates interfere with the purchases, they can be secured after the boat is in the water. If the field-carriage is to accompany the gun, lay the wheel and trail tracks.

In a sea-way, it may be better also to place the howitzer in the launch, laying it athwart-ships, and bolting the two ends of the slide into the bow pivot-plates, which will hold it perfectly firm.

As a general rule, the howitzer is not to be handled separately from one of its carriages. It may be hoisted into the launch on either field or boat-carriage, as circumstances may dictate.

When the boat-carriage is preferred, sling it with a stout strap passed through the loop-lugs and brought up round the gun, into which hook the purchase; previously shove the bed a little towards the rear end of the slide, so as to have the carriage hang square, and set the compressors tight.

Digitized by Google

When the boat has been hoisted out, the howitzer, its ammunition and equipments, will be stowed in it conformably to the requirements of the occasion.

Supposing the arrangements to be of a general character, and to be adapted, subsequently, to the service as circumstances may require.

The howitzer may be in the bow on its boat-carriage, bolted to the stem-pivot.

The field-carriage aft, the wheels resting on the floor of the stern sheets and bearing against the after-thwart; the trail laid over the quarter rail, so as not to interfere with the steering.

The ammunition can be stowed in the stern sheets, or elsewhere, as may be most convenient for trim of launch, or for its own preservation.

The captain of the howitzer slings his haversack, and deposits in it a supply of primers, a vent bit, and vent cloth, which are handed to him by the quarter-gunner.

Digitized by Google

The stations in the boat and at the howitzer will be as follows, for 20 men; if fewer are employed, the higher numbers are to be omitted:—

Boat.			Howitzer.
Stations.			*Duty.*
Quarter-gunner,		Ammunition.	Ammunition.
Coxswain,		Helm.	
No. 1.		Bow.	*Captain* of *howitzer;* points and fires the gun, superintends orders, and gives orders in absence of an officer.
	Port.	*Starboard.*	
2.	———	Bow oar.	*Sponger;* sponges and rams home charge.
3.	Bow oar.	———	*Loader;* receives and enters ammunition.
4.	———	2d oar.	Tends forward compressor.
5.	2d oar.	———	Tends after compressor.
6.	———	3d oar.	Train rope.
7.	3d oar.	———	Tends vent and puts in primer.
8.	———	4th oar.	
9.	4th oar.	———	
10.	———	5th oar.	
11.	5th oar.	———	
12.	———	6th oar.	
13.	6th oar.	———	
14.	———	7th oar.	
15.	7th oar.	———	
16.	———	8th oar.	
17.	8th oar.	———	
18.	———	9th oar.	
19.	9th oar.	———	

Officer of the launch directs the whole operations, or may take especial charge of the howitzer.

Officer of the gun is in command of the piece, unless otherwise ordered by the officer of the boat.

Digitized by Google

Plate 2.

Stations in Boat.

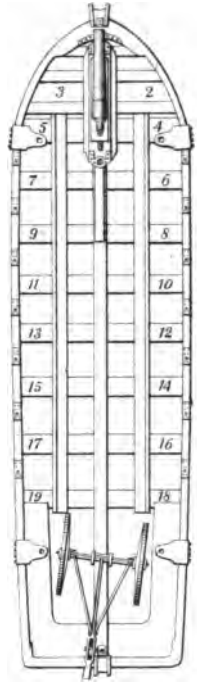

Ad. Cluss, del.

F. S. Duvel & Co. Lith. Pr. Phil.

Digitized by Google

Digitized by Google

Digitized by Google

Plate 3.

Stations at Howitzer in Boat.

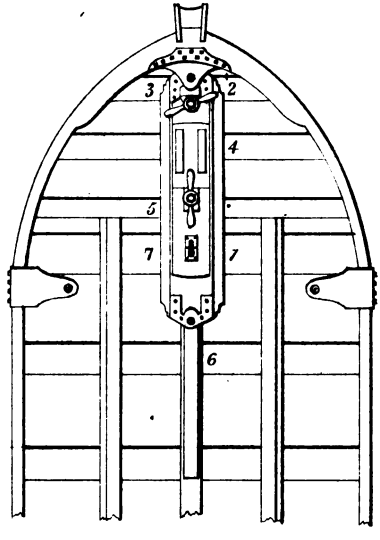

1

Ad. Cluss, del.

P. S. Duval & Co's Lith. Phila.

Digitized by Google

(Preliminary Order)—MAN THE HOWITZER.

The captain of the gun is to see that the elevator, sight, and lock are in order for firing.

Nos. 2, 3, 4, 5, 6, 7. Trail oars.

No. 2 goes to starboard side of muzzle, having the sponge and rammer ready.

No. 3 goes to port side of muzzle, takes out tompion.

No. 4 to starboard side, near forward compressor.

No. 5 port side near after compressor.

No. 6 after end of slide, and hooks training-rope.

No. 7 tends the vent and puts in primer.

If the gun is unloaded, it must be run in.

1. SPONGE.

No. 7 closes vent (*a*).

No. 2 enters the sponge, and, pressing it firmly to the bottom, turns it round and withdraws it (*b*).

Quarter-gunner takes a round from the ammunition-box, and, if shell or shrapnell be used, holds it for the officer in command of gun to adjust the fuze.

2. LOAD.

Quarter-gunner passes forward with the fixed charge, protecting it under his jacket (*c*).

No. 3 receives from quarter-gunner and enters charge.

No. 2 rams home to the mark on rammer-handle (*d*).

No. 7 puts in primer, and covers it with his hand until Nos. 1 and 2 are clear of the gun (*e*).

Digitized by Google

3. Point.

Nos. 4 and 5 ease compressors (*f*).

All six men and captain of gun run out the howitzer (*g*).

Nos. 4 and 5 then tighten compressors.

Officer of gun puts up the sight as directed by officer of launch (*h*).

Captain of gun brings the elevation within the limits of the boat's motion.

And causes No. 6, with the assistance of some others, to train nearly to object, if the boat is under way.

4. Fire.

If the boat have motion, or is under way, a discretionary execution of this order is necessarily implied.

The assumed elevation having been given by the elevator, a slight motion of the helm is made to sweep the piece laterally, so as to cross the object.

The captain of the gun closely watches this movement, with his eye down on the sights, and, holding the lock laniard firmly, draws as soon as the sights coincide with the object.

Immediately after firing, he coils up the laniard, and pulls from the vent any pieces of the quill that may remain, also enters the bit to clear it entirely through (*i*).

Digitized by Google

NOTES TO THE FORM OF BOAT EXERCISE.

(*a*). The necessity of closing the vent is now a mooted question; as the operation itself is a slight one, having no appreciable effect in complicating or delaying the manœuvre of the gun, it is not deemed advisable to lay it aside in this "Form." The practice here shows that the most ready, and equally sure method, is merely to lay a piece of untwilled woollen cloth over the vent, and press it down with the hand, or else turn the lock on it, and hold that down.

(*b*). Too much care cannot be used in sponging; as a premature explosion endangers life and limb: a moist sponge is to be preferred, for contact with it must surely extinguish every trace of fire in the bore.

It may be considered a safeguard against accident, if the absence of a single instance of the kind, in several years' practice, can be admitted as evidence; during this time, the habit has been, in proving pieces, and exercising the men to fire rapidly; ordinarily, seven or eight times in a minute.

(*c*). The head of the fuze composition must be guarded against moisture from the fingers, rain, or spray of the sea; otherwise, there will be a failure to ignite.

(*d*). The ammunition is never to be struck with the rammer-head, but pushed home, and with very moderate force; particularly omitting a very common practice of forcing the charge after it reaches the bottom of the bore. In ramming home the charge, No. 2 should always keep his body at the side of the chase, not before the muzzle.

(*e*). It is not necessary to pierce the cylinder of the charge when percussion-primers are used; their power being always sufficient to pass through it.

(*f*). It is only necessary to give the compressors a turn, or a part of a turn; this will relieve the compression completely, and time is saved subsequently in compressing.

Digitized by Google

(*g*). Some will take hold of the standard of the carriage-bed that receives the loop of the piece, others of the breech or bed, as may be convenient to run out the gun.

(*h*). In tightening the thumb-screw that retains the breech-sight in position, do not turn it too hard; the thread may be stripped by continuing to do so. The sight may descend by the shock of the discharge, but this is of no moment.

In point-blank firing, the breech-sight is not required; the eye must then range along the cylinder and muzzle-sight.

(*i*). The charge may refuse fire; if this arises from not properly drawing the lock, it will be evident at sight, as the wafer of the primer will not flash, in which case No. 7 will throw back the lock.

If the primer explodes without acting on the charge, care must be taken not to approach the piece too soon, as it may only hang fire, and the recoil will injure any one in the way of it. After a seasonable pause, the captain of the howitzer will remove the residue of the primer, pass the bit down the vent, and reinsert another primer.

Digitized by Google

PIVOTING THE HOWITZER.

The sweep allowed by the stem-pivot is about one point and a half starboard or port; if this is not sufficient to train the piece on the object, without diverging inconveniently from the course or position of the boat, then the bow pivots may be used.

The officer of the launch gives the order:—

PIVOT ON THE PORT (or Starboard) BOW.

No. 6, with the assistance of the others, trains the rear end of the slide into the bow-pivot which is *not* to be used. No. 7 bolts it in. No. 2 draws bolt out of stem-pivot and, with assistance, draws round the forward end of the slide into the pivot *to be used;* drops in the bolt. No. 6 withdraws the bolt from rear end of slide.

The sweep on the bow-pivots includes an arc of about 120 degrees.

It is not advisable to train the howitzer more than a point abaft the beam if forward, or more than a point forward the beam if aft; as the accidental explosion of a shell near the muzzle, and even of a shrapnell, might be dangerous to those in the boat.

On the bow-pivot, the piece may be pointed nearly from the direction of the keel to a little abaft the beam.

SHIFTING THE HOWITZER.

If this does not bear on the object with such assistance as is admissible from the helm, then the officer of the launch may direct the howitzer to be shifted to the other end of the boat.

The light 12 pounders, with their boat-carriages, average 660 lbs. each; and can be transported by hand from one end of the boat to another.

With their boat-carriages the 12 pounders of 750 average 1200 lbs. each; the 24 pounders about 2000 lbs., and will probably be more conveniently managed, especially if the boat have motion, by placing rollers (2½ to 2¾ inches in diameter) on the tracks laid for the field-carriage. On these the boat-carriage can be shifted from one end to the other, using light falls at each end to keep it under command.

Digitized by Google

DISEMBARKATION OF THE HOWITZER.

1. Prepare to Land.

The quarter-gunner fills the pouches or passing-boxes with one round each, and passes them to the men, each of whom, except No. 2, slings a pouch over the right shoulder, and buckles the strap as short as possible, so as to keep the ammunition clear of the water when leaving the boat.

The captain of the gun also shortens the strap of his haversack.

Trail Bow and Stroke Oars.

Nos. 2 and 3 will adjust the bed of the boat-carriage to its proper place on the slide for shifting; place the muzzle-block, and make the muzzle bear on it by means of the elevator; pass the strap around the neck of the cascable, and put the shifting-spar through the strap; the quarter-gunner, assisted by the men from the after oars, raises the field-carriage up on the tracks.

2. Trail.

The boat being beached in season, the men trail their oars and jump to their stations.

Nos. 4 and 5 over the bow to adjust the skids, which are launched by Nos. 6 and 7.

No. 2 attends the elevator.

No. 3 attends the muzzle.

Nos. 8, 10, 11, and 13 the shifting-spar, assisted by as many of the crew as can take hold.

No. 9 draws the loop-bolt.

The stroke oarsmen run the field-carriage forward, the quarter-gunner guiding it on the track by the trail.

3. Shift the Howitzer.

Now clear the elevator; heave up the breech of the gun by the spar; Nos. 6 and 7 back the bed on the slide; run the field-carriage a little forward, so that its lugs come under the loop of the howitzer; lower the piece; put in the loop-bolt and elevator; hook on the drag-rope, and ship the trail-handspike in its socket.

Digitized by Google

4. LAND.

Nos. 2, 3, 6, and 7 now jump out of the boat, and, with Nos. 4 and 5, divide to each skid; not standing between them, but keeping outside of them. The stroke oarsmen wheel the piece up to the gunwale by the spokes, the quarter-gunner guiding the trail by the trail-handspike; the remainder of the boat's crew take hold of the drag-rope, so as to ease the howitzer down from the bow, the quarter-gunner guiding it on the skids with care, so that the wheels may not run off sideways.

When down off the skids and on the bottom, the drag-rope may be hooked around the axle, and the howitzer run up on the beach.

The captain of the howitzer superintends and assists whenever it may be necessary.

The sponges and rammers are now to be attached in their places on the trail.

If required, one or two boxes or double boxes may be lashed under the axles.

The boxes contain 9 rounds each, the double boxes 18 rounds each.

EMBARKATION OF THE HOWITZER.

When the howitzer is to be embarked, the ammunition-boxes, if slung to the axle, should be cast off from it, and put in the boat separately.

The men unsling the ammunition-pouches or passing-boxes, and pass them into the boat, which is to be brought to a convenient distance from the beach, the skids laid and secured.

The field-carriage is pointed with the trail towards the boat, and drawn down to the skids, with a wheel resting on each.

Nos. 2, 3, 4, 5, 6, and 7 divide at the wheels, and take hold of the spokes, so as to assist the carriage up. No. 14 ships the trail-handspike, and tends it with No. 15. The rest of the men get into the boat and take hold of the drag-rope. At the word HEAVE! the men at the wheels bear the carriage up on the skids, those in the boat haul on the drag-rope, and the two at the trail bear it up so that the quarter-gunner, who stands at the bow, can get hold of the trail-handspike and guide the carriage fairly.

When the howitzer is in the boat, the skids are unhooked and put in the boat by Nos. 4, 5, 6, and 7.

The howitzer may now be shifted to the boat-carriage, by reversing the process already described in orders Nos. 1, 2, and 3, for the shifting to the field-carriage.

Digitized by Google

EXERCISE WITH HOWITZER ON FIELD-CARRIAGE.

GUN'S CREW.

Stations.	*Duty.*
Quarter-gunner.	Charge of ammunition and spare equipment.
No. 1. Rear of breech, to the right.	*Captain* of *piece;* points and fires the howitzer, superintends orders, and gives orders in absence of an officer.
2. Starboard side of muzzle.	Sponges and rams home.
3. Port side of muzzle.	Receives and enters ammunition.
4. Rear and outside of starboard wheel.	Assists at starboard wheel.
5. Rear and outside of port wheel.	Passes ammunition, assists at port wheel.
6. Five yards rear of starboard wheel.	Assists at starboard wheel, attends bolt of trail wheel, and trail handspike.
7. Five yards rear of port wheel.	Passes ammunition, assists at port wheel.
8. With No. 6.	Assists at starboard wheel.
9. With No. 7.	Assists at port wheel.
10. Rear of breech, to the left.	Closes the vent, puts in primer.

(Preparatory Order)—MAN THE HOWITZER.

The men go to their stations as above designated.

If the piece has been just landed, the *captain of the howitzer* will have been provided with his haversack, previously supplied.

All the men, except No. 2, with one round in a pouch.

No. 2 takes the sponge and rammer.

No. 6 unbolts trail wheel, and ships handspike in its socket of trail.

The ammunition-box, if there be any with the howitzer, is to be deposited about twenty-five yards in the rear of howitzer, in charge of quarter-gunner.

The drag-rope is deposited with the ammunition-box.

Digitized by Google

Stations at the Field Carriage.

Plate 4.

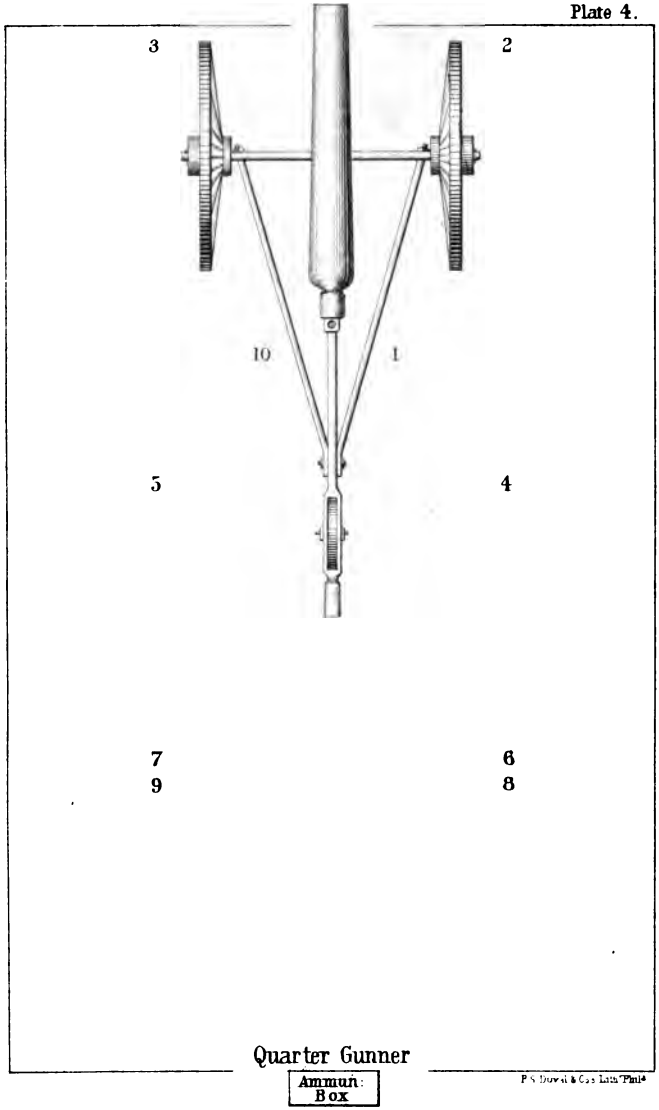

P. S. Duval & Co's Lith. Phil.

Digitized by Google

Digitized by Google

1. Sponge.

No. 2 enters the sponge, and, pressing it firmly to the bottom, turns it round and withdraws it.

Quarter-gunner takes a round from the ammunition-box, or from the pouch or passing box of one of the men; and, if shell or shrapnell be used, holds it for the officer in command to adjust the fuze.

2. Load.

The charge is to be passed along by the quarter-gunner to No. 7, and by No. 7 to No. 5, and by No. 5 to No. 3, who enters it into the muzzle.

No. 2 rams home to the mark on rammer-handle.

No. 10 puts in primer, and covers it with his hand until Nos. 2 and 3 have withdrawn to their stations outside the wheels.

3. Point.

Officer of gun puts up the sight, as directed by officer in command.

The captain of the gun gives the piece the proper elevation with the screw, and causes No. 6 to train the gun with the trail-handspike to the desired direction. He then withdraws as far as the lock laniard permits, standing on the right quarter of the breech, and outside of the wheel.

No. 10 stands outside of the port wheel. Nos. 2 and 3 fall back upon Nos. 1 and 10, and the remainder of the gun's crew take the stations first assigned them.

4. Fire.

The captain of the howitzer instantly draws the laniard at the word.

No. 10 closes the vent.

Nos. 5, 7, and 9 go to the port wheel; 4, 6, and 8 to the starboard wheel, taking hold of the spokes, ready to wheel the carriage forward, as may be directed by the officer in command.

Digitized by Google

(Concluding Order)—SECURE THE HOWITZER.

The quarter-gunner secures the ammunition-box, and gets ready the beckets or lashing.

The captain of the howitzer coils the laniard around the lock.

No. 6 bolts the trail wheel.

No. 2 may carry the sponge in his hand if the fire is merely suspended.

No. 6 may also carry the trail-handspike.

Nos. 7 and 8 hook on the drag-rope, and lead its parts fair for taking hold.

Wheel the piece over the ammunition-box, and lash or becket it to the axle.

The piece is now ready for any change of position.

Digitized by Google

Digitized by Google

Digitized by Google

Digitized by Google

Digitized by Google

Digitized by Google

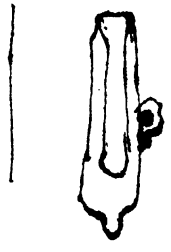

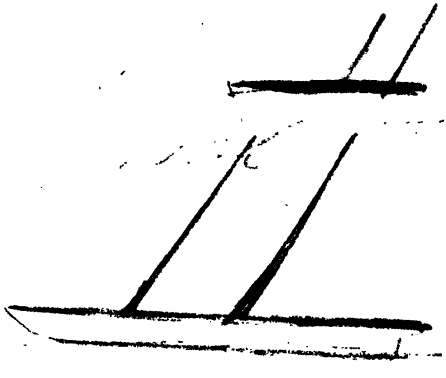

Digitized by Google

YC 105589

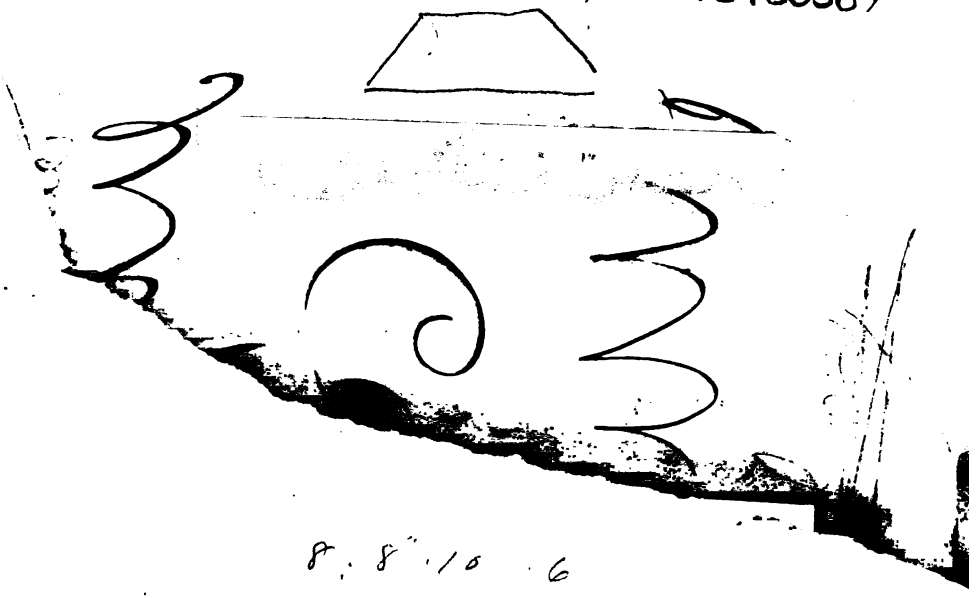

8. 8. 10. 6

Digitized by Google

RETURN TO → CIRCULATION DEPARTMENT
202 Main Library

LOAN PERIOD 1 HOME USE	2	3
4	5	6

ALL BOOKS MAY BE RECALLED AFTER 7 DAYS
1-month loans may be renewed by calling 642-3405
6-month loans may be recharged by bringing books to Circulation Desk
Renewals and recharges may be made 4 days prior to due date

DUE AS STAMPED BELOW

REC. CIR. OCT 24 '82		

Digitized by Google

UNIVERSITY OF CALIFORNIA, BERKELEY
RM NO. DD6, 60m, 12/80 BERKELEY, CA 94720

YC105589

Digitized by Google